Raze Bollard

96634409 <MGR SPIKE BOL RAZE/DCO/THOR W

Raze Bollard

Ground spike adaptor for root mounting bollards with flange plate. Bolts not supplied.

TLG_ACCS_F_MRGSPIKE.jpg

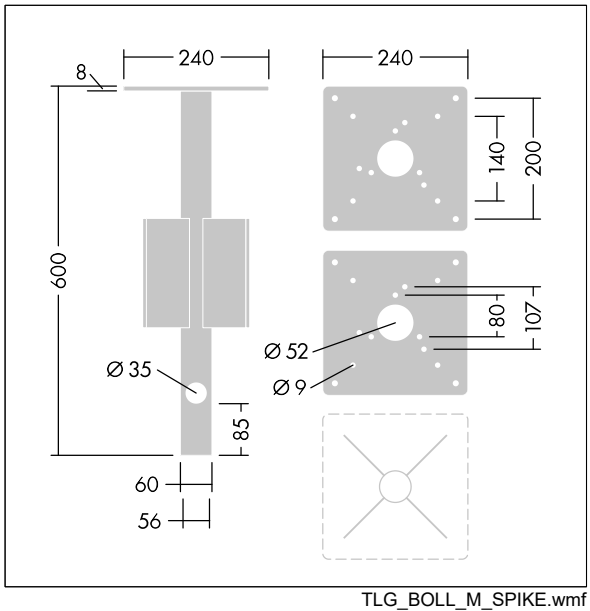

TLG_BOLL_M_SPIKE.wmf

All values marked with an * are rated values. Unless stated otherwise, the values apply to an ambient temperature of 25°C.

Thorn Lighting is constantly developing and improving its products. The right is reserved to change specifications without prior notification or public announcement.
© Thorn Lighting