# Plurio

## 96668704 PLI R 24L35-722-40 R/S T60 CL1 ANT

| | | | | | | | | | |
|---|---|---|---|---|---|---|---|---|---|
| ISO 9223 C5 | | IP66 | IK08 | | CE | | | $T_a$25 | |

## Plurio

Plurio Indirect: A decorative post-top LED lantern with radially symmetric distribution. LED driver with 24 LEDs driven at 350mA. Class I electrical, IP66, IK08. Base: cast aluminium, powder coated anthracite (close to RAL7043). Canopy: round shape, aluminium, textured anthracite (close to RAL7043). Diffuser: UV stabilised, clear polycarbonate with anti-glare prisms. Indirect, reflector based optic. Complete with 2200-4000K NightTune LEDs. Post top mounting to Ø60mm column.

Upward lighting emissions below 1%.

Dimensions: Ø564 x 555 mm
Luminaire input power: 26 W
Luminaire luminous flux: 2973 lm
Luminaire efficacy: 114 lm/W
Weight: 9.5 kg
Scx: 0.191 m²

TLG_PLRL_F_IRC_ANT.jpg

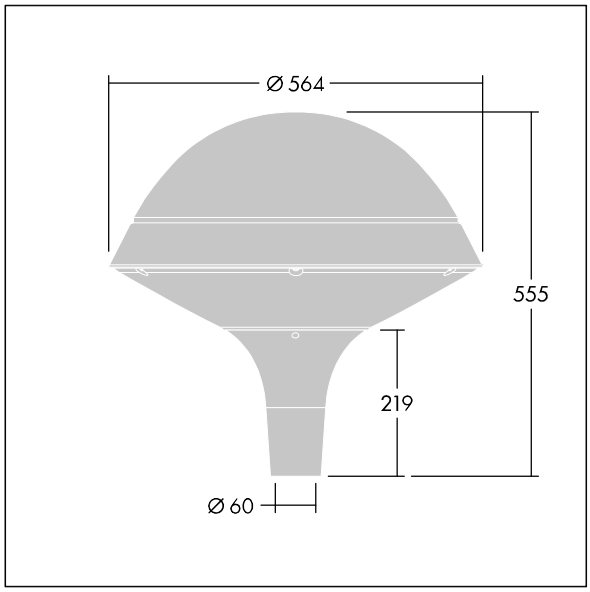


TLG_PLRL_M_IRC_T60.wmf

This product contains a light source of energy efficiency class D.

All values marked with an * are rated values. Thorn uses tried and tested components from leading suppliers, however there may be isolated instances of technology-related failures of individual LEDs during the rated product lifetime. International standards set the tolerance in initial flux and connected load at ±10%. Unless stated otherwise, the values apply to an ambient temperature of 25°C.

Thorn Lighting is constantly developing and improving its products. The right is reserved to change specifications without prior notification or public announcement.
© Thorn Lighting