Isaro Pro

92905131 IP 48L35-740 WS BP 3550 CL1 M42 GY-S

ISO 9223 C5 | IP66 | IK09

Isaro Pro

A state of the art LED road lighting lantern (medium) with 48 LEDs driven at 350mA with Wide Street optic. Programmable LED driver. Class I electrical, IP66, IK09. Housing: die-cast aluminium (EN AC-44300), powder coated textured light grey 150 (close to RAL9006). Spigot: die-cast aluminium (EN AC-44300), unpainted. Enclosure: 5mm thick glass. Fixings: stainless steel. Supplied with Ø42mm spigot adaptor which can be fitted for post-top (0°/5°/10°/15°/20° tilt) or side-entry (-15°/-10°/-5°/0°/5°/10°/15° tilt). Equipped with 50% power reduction circuit, effective 3 hours before and 5 hours after a calculated midnight. Complete with 4000K LED. Surge protection: 10kV single pulse common mode and 8kV multipulse common mode and 6kV multipulse differential mode. If permanent DALI system is connected, 6kV multipulse common and differential mode.

Dimensions: 718 x 224 x 114 mm
Luminaire input power: 49.5 W
Luminaire luminous flux: 8341 lm
Luminaire efficacy: 169 lm/W
Weight: 7.4 kg
Scx: 0.066 m²

TLG_ISRP_F_M_PDB_SIL.jpg

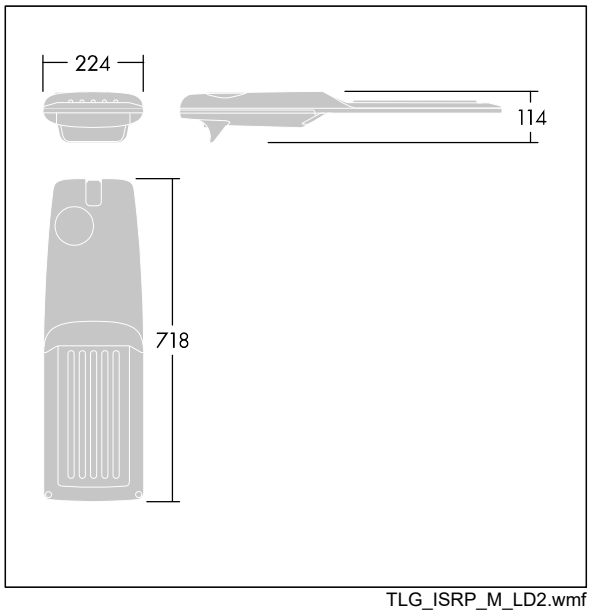

TLG_ISRP_M_LD2.wmf

This product contains a light source of energy efficiency class D.

All values marked with an * are rated values. Thorn uses tried and tested components from leading suppliers, however there may be isolated instances of technology-related failures of individual LEDs during the rated product lifetime. International standards set the tolerance in initial flux and connected load at ±10%. Unless stated otherwise, the values apply to an ambient temperature of 25°C.

Thorn Lighting is constantly developing and improving its products. The right is reserved to change specifications without prior notification or public announcement.
© Thorn Lighting