Urba Deco

96272883 <UD48L50 730 NR-S CL CL1 MCA-T U0

ISO 9223 C3 | IP66 | IK10 | Ta35

Urba Deco

A smart, sophisticated architectural urban lantern with 48 LEDs driven at 500mA and a Narrow Road optic with no upward light. Electronic, fixed output control gear. Class I electrical, IP66, Impact strength: IK10. Canopy and base: die-cast aluminium (AS9U3, LM24 equivalent, EN AC-46000) textured black (close to RAL9005). Enclosure: 6mm thick clear glass. Catenary mounted through 34G, luminaire perpendicular to the road. Complete with 3000K LED.

Surge protection: 10kV single pulse common mode and 8kV multipulse common mode and 6kV multipulse differential mode. If permanent DALI system is connected, 6kV multipulse common and differential mode.

Dimensions: 510 x 241 x 266 mm
Luminaire input power: 70 W
Luminaire luminous flux: 10051 lm
Luminaire efficacy: 144 lm/W
Weight: 7 kg
Scx: 0.031 m²

TLG_URBD_F_MCA.jpg

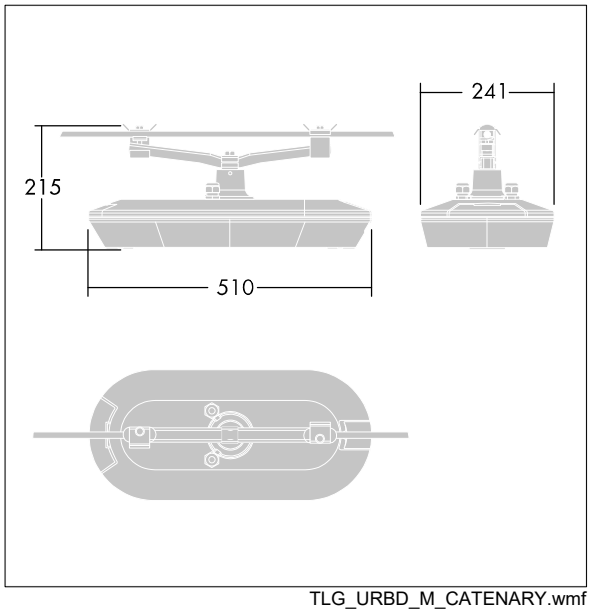

TLG_URBD_M_CATENARY.wmf

This product contains a light source of energy efficiency class D.

All values marked with an * are rated values. Thorn uses tried and tested components from leading suppliers, however there may be isolated instances of technology-related failures of individual LEDs during the rated product lifetime. International standards set the tolerance in initial flux and connected load at ±10%. Unless stated otherwise, the values apply to an ambient temperature of 25°C.

Thorn Lighting is constantly developing and improving its products. The right is reserved to change specifications without prior notification or public announcement.
© Thorn Lighting