Thor

96643900 TR 48L50-730 NR BP CL1 OP W9 T60E

ISO 9223 C5	IP66	IK08		CE			Ta 0 +25

Thor

A large size, smart urban LED lantern with 48 LEDs driven at 500mA with Narrow Road optic and UV stabilised polycarbonate dome with opal finish. Class I electrical, IP66, IK08. Body, bracket and ring: die-cast aluminium (AS12U, LM6 equivalent, EN AC-44300) treated against corrosion, powder coated anthracite (close to RAL7043). Enclosure: 4mm toughened flat glass. Screws and closing set: stainless steel. Pre-wired with 9m cable. Post top mounting to Ø60mm column, tilt 0°, adjustable from -15° to +10°. Equipped with power reduction circuit, effective 3 hours before and 5 hours after a calculated midnight. Complete with 3000K LED.

Dimensions: Ø577 x 155 mm
Luminaire input power: 79 W
Luminaire luminous flux: 9759 lm
Luminaire efficacy: 124 lm/W
Weight: 14.2 kg
Scx: 0.044 m²

TLG_THRL_F_MTPOP0.jpg

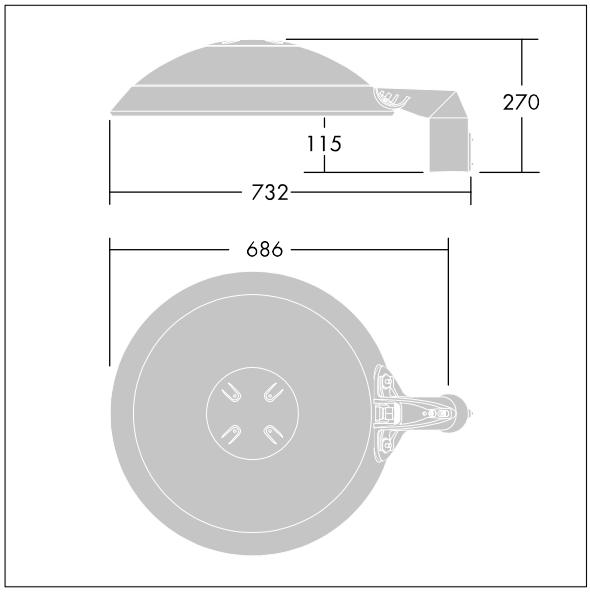

TLG_THOR_M_PTOP.wmf

This product contains light sources of energy efficiency classes D, E.

All values marked with an * are rated values. Thorn uses tried and tested components from leading suppliers, however there may be isolated instances of technology-related failures of individual LEDs during the rated product lifetime. International standards set the tolerance in initial flux and connected load at ±10%. Unless stated otherwise, the values apply to an ambient temperature of 25°C.

Thorn Lighting is constantly developing and improving its products. The right is reserved to change specifications without prior notification or public announcement.
© Thorn Lighting

Thor

96643900 TR 48L50-730 NR BP CL1 OP W9 T60E

Thorn Lighting is constantly developing and improving its products. The right is reserved to change specifications without prior notification or public announcement.
© Thorn Lighting