Concavia S

96218701 <CONCAVIA S RAL

A versatile and compact reflector fitting offering high performance and unique aesthetics for use in many commercial applications

Aluminium reflector.
Dimensions: Ø320 x 217 mm
Weight: 0.5 kg

TLG_CCVA_F_SAL.jpg

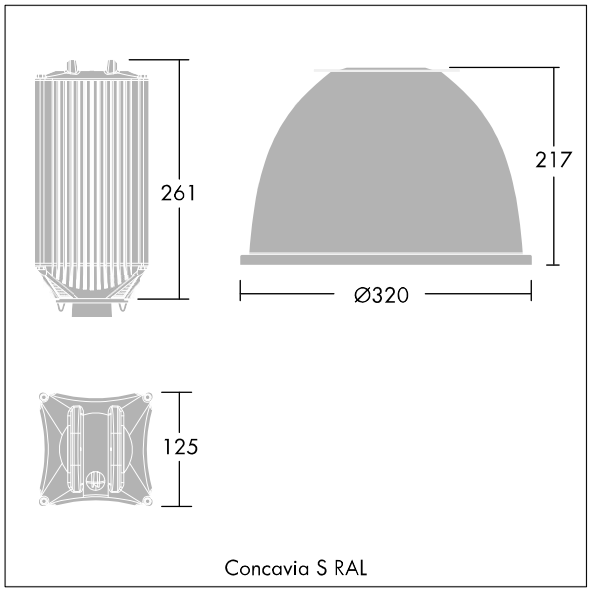

TLG_CCVA_M_SLD1.wmf

All values marked with an * are rated values. Unless stated otherwise, the values apply to an ambient temperature of 25°C.

Thorn Lighting is constantly developing and improving its products. The right is reserved to change specifications without prior notification or public announcement.
© Thorn Lighting