Popular Range Battens

96229561 <POPPACK BATTEN 1X58W T26 HF E3 L840

IP20	⏚	CE	850°C	T_a25

Popular Range Battens

Batten luminaire with integral emergency lighting facility for 1 x 58W Light Source: 1 x T26 / 58W lamp. Combined HF & EM SC circuit with emergency circuit. steel - white stoved enamel.

Dimensions: 1500 x 60 x 82 mm
Luminaire input power: 60 W
Weight: 3.05 kg

TLG_POPR_F_BS.jpg

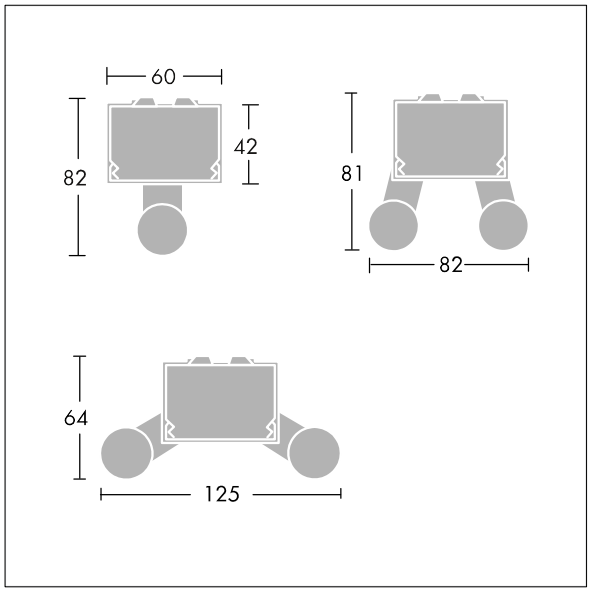

TLG_POPR_M_LD1.wmf

All values marked with an * are rated values. Unless stated otherwise, the values apply to an ambient temperature of 25°C.

Thorn Lighting is constantly developing and improving its products. The right is reserved to change specifications without prior notification or public announcement.
© Thorn Lighting