Hipak G2

96665382 HIPAK KIT COVER PR S (6 PCS)

Hipak G2

Prismatic refractor for Ø350mm Hipak G2 luminaire.
Supplied in pack of 6.

TLG_HIPK_F_COVERPDB.jpg

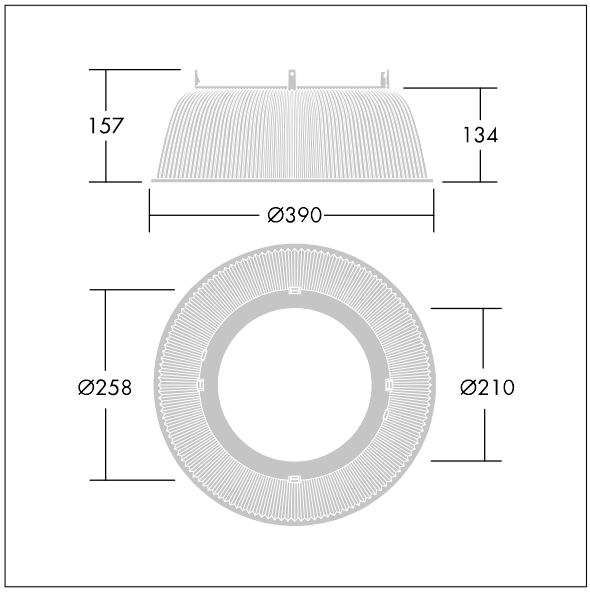

TLG_HIPK_M_150WPRISREF.wmf

All values marked with an * are rated values. Unless stated otherwise, the values apply to an ambient temperature of 25°C.

Thorn Lighting is constantly developing and improving its products. The right is reserved to change specifications without prior notification or public announcement.
© Thorn Lighting