THORN

96643240 <CHAL PRO LED2000-830 R2M RSB W6

IP20 IP54 IK03 850°C T_a25

A recessed LED downlight. Remote ready2mains™ control gear. IP54 (IP20 from above), Class I electrical. Body: aluminium, painted. Reflector: satinbrite. Suitable for mounting in ceiling thicknesses of 1-40mm in a Ø150mm cut-out. Complete with 3000K LED.

Dimensions: Ø172 x 94 mm
Luminaire input power: 16.3 W
Luminaire luminous flux: 1900 lm
Luminaire efficacy: 117 lm/W
Weight: 0.49 kg

TLG_CHLP_F_RSBPDB.jpg

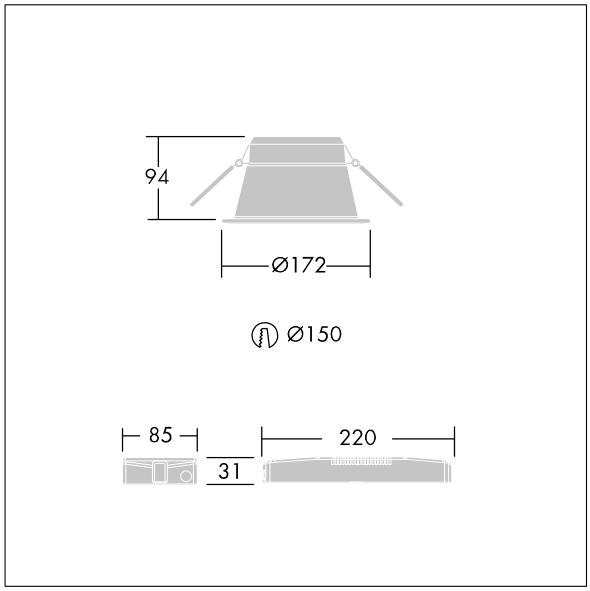

TLG_CHLP_M_DL1.wmf

All values marked with an * are rated values. Thorn uses tried and tested components from leading suppliers, however there may be isolated instances of technology-related failures of individual LEDs during the rated product lifetime. International standards set the tolerance in initial flux and connected load at ±10%. Unless stated otherwise, the values apply to an ambient temperature of 25°C.

Thorn Lighting is constantly developing and improving its products. The right is reserved to change specifications without prior notification or public announcement.
© Thorn Lighting

96643240 <CHAL PRO LED2000-830 R2M RSB W6

Thorn Lighting is constantly developing and improving its products. The right is reserved to change specifications without prior notification or public announcement.
© Thorn Lighting