Discontinued

96628029 <CHAL 200 LED1300-840 R2M E3 RSB

IP20 IP54 | IK03 | 850°C | T_a25

Discontinued

A recessed LED downlight. Remote ready2mains™ control gear with 3 hour, manual test, emergency lighting circuit. IP54 (IP20 from above), Class I electrical. Body: aluminium, painted white (RAL 9016). Reflector: satinbrite. Suitable for mounting in ceiling thicknesses of 1-40mm in a Ø200mm cut-out. Complete with 3000K LED.

Dimensions: Ø220 x 94 mm
Luminaire input power: 14.2 W
Luminaire luminous flux: 1350 lm
Luminaire efficacy: 95 lm/W
Weight: 1.88 kg

TLG_CHLC_F_PDB.jpg

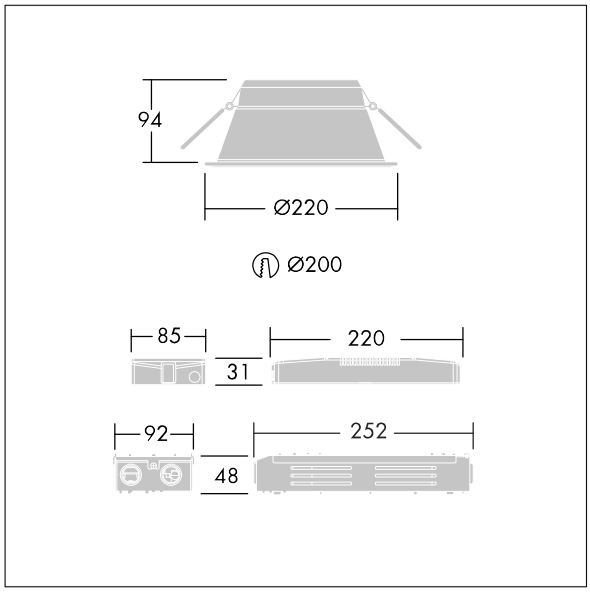

TLG_CHLC_M_EM.wmf

All values marked with an * are rated values. Thorn uses tried and tested components from leading suppliers, however there may be isolated instances of technology-related failures of individual LEDs during the rated product lifetime. International standards set the tolerance in initial flux and connected load at ±10%. Unless stated otherwise, the values apply to an ambient temperature of 25°C.

Thorn Lighting is constantly developing and improving its products. The right is reserved to change specifications without prior notification or public announcement.
© Thorn Lighting