Discontinued

96627919 <CHAL 150 LED1200-830 R2M RSB

IP20 IP54 IK03 850°C T_a25

Discontinued

A recessed LED downlight. Remote ready2mains™ control gear. IP54 (IP20 from above), Class II electrical (this product is not earthed). Body: aluminium, painted white (RAL 9016). Reflector: satinbrite. Suitable for mounting in ceiling thicknesses of 1-40mm in a Ø150mm cut-out. Complete with 3000K LED.

Dimensions: Ø172 x 94 mm
Luminaire input power: 13.3 W
Luminaire luminous flux: 1150 lm
Luminaire efficacy: 86 lm/W
Weight: 0.58 kg

TLG_CHLC_F_PDB.jpg

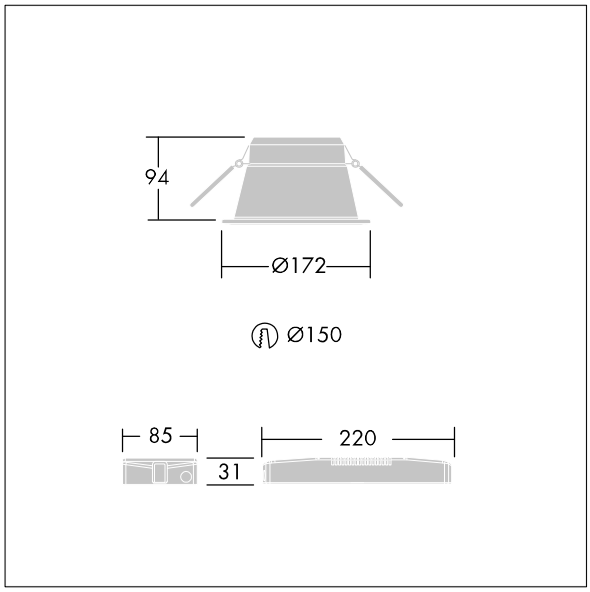

TLG_CHLP_M_DL1.wmf

All values marked with an * are rated values. Thorn uses tried and tested components from leading suppliers, however there may be isolated instances of technology-related failures of individual LEDs during the rated product lifetime. International standards set the tolerance in initial flux and connected load at ±10%. Unless stated otherwise, the values apply to an ambient temperature of 25°C.

Thorn Lighting is constantly developing and improving its products. The right is reserved to change specifications without prior notification or public announcement.
© Thorn Lighting