E/Fact

96271611 <EFACT C1 5L90 ACC 8D BLU RS SF

IP67	IK09				

E/Fact

A medium square ground recessed luminaire. 5 LED(s) driven at 900mA by integral driver, 8° beam angle for walkover guidance applications. Body: die-cast aluminium with powdered paint finish. Frame: stainless steel, 2mm thick. Front glass: semi-frosted toughened sodic glass, 10mm thick, surface temperature complies with EN60598-2-13. Recessing box: polypropylene. Rated IP67, class I electrical. Maximum static load 1000kg. Complete with blue LED

Dimensions: 186 x 186 x 202 mm
Luminaire input power: 15.9 W
Luminaire luminous flux: 193 lm
Luminaire efficacy: 12 lm/W
Weight: 4.02 kg

TLG_EFCT_F_C15LEDRSSF.jpg

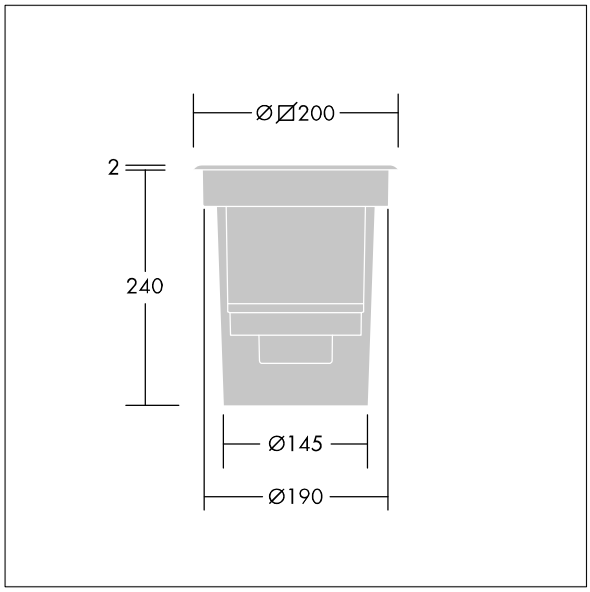

TLG_EFCT_M_2015LD1RS.wmf

All values marked with an * are rated values. Thorn uses tried and tested components from leading suppliers, however there may be isolated instances of technology-related failures of individual LEDs during the rated product lifetime. International standards set the tolerance in initial flux and connected load at ±10%. Unless stated otherwise, the values apply to an ambient temperature of 25°C.

Thorn Lighting is constantly developing and improving its products. The right is reserved to change specifications without prior notification or public announcement.
© Thorn Lighting

E/Fact

96271611 <EFACT C1 5L90 ACC 8D BLU RS SF

Thorn Lighting is constantly developing and improving its products. The right is reserved to change specifications without prior notification or public announcement.
© Thorn Lighting