Qba LED

96272480 <QBA LED 8L70 GN

ISO 9223 C3	IP66	IK08	⏚	CE

Qba LED

LED floodlight for wall washing illumination. Body and frame in die-cast aluminium, powder coated textured grey finish. 4mm toughened front glass. Complete with LEDs.

Dimensions: 229 x 146 x 203 mm
Luminaire input power: 23 W
Weight: 5.1 kg

TLG_QBAL_F_2.jpg

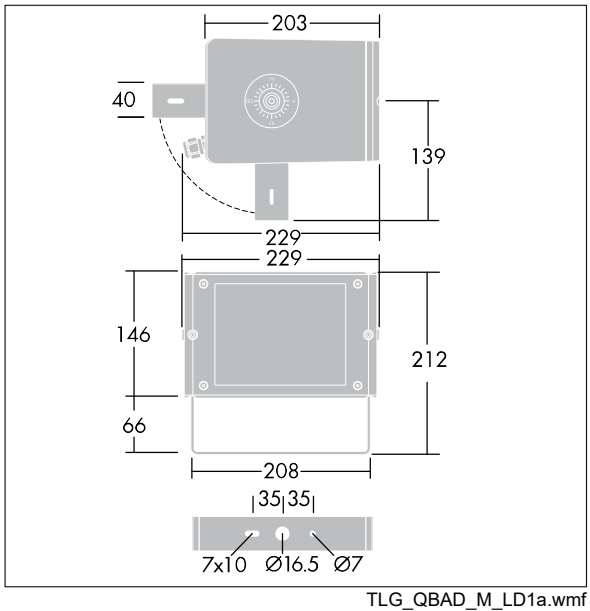

TLG_QBAD_M_LD1a.wmf

All values marked with an * are rated values. Thorn uses tried and tested components from leading suppliers, however there may be isolated instances of technology-related failures of individual LEDs during the rated product lifetime. International standards set the tolerance in initial flux and connected load at ±10%. Unless stated otherwise, the values apply to an ambient temperature of 25°C.

Thorn Lighting is constantly developing and improving its products. The right is reserved to change specifications without prior notification or public announcement.
© Thorn Lighting

Qba LED

96272480 <QBA LED 8L70 GN

Thorn Lighting is constantly developing and improving its products. The right is reserved to change specifications without prior notification or public announcement.
© Thorn Lighting