Diffusalux

96627545 <DIFFUSALUX IP40 1X49W HF E3 PC CL L840

IP40	IK05		CE	850°C

Diffusalux

High performance IP40 surface mounted general purpose fluorescent luminaire for 1 x 49W Light Source: 1 x T16 / 49W lamp(s). Electronic, fixed output control gear with 3 hour, manual test, emergency lighting circuit. Body in white painted steel, screw fixed endcaps in white polycarbonate with a curved, precision extruded clear prismatic polycarbonate diffuser. Ø21.5mm cable entry hole in the centre of the back spine with optional cable entry through each end cap. Fitting supplied with innovative "quick fix" horseshoe and sliding washers for direct screw fixing to surface, fixing centres 1425mm. Standard BESA fixings. Can be suspended using wire suspension accessory kit (to be ordered separately). 5 x 2 x 2,5mm² piano key terminal block. Complete with 840 lamp(s).

Dimensions: 1520 x 217 x 90 mm
Luminaire input power: 52.2 W
Weight: 4.75 kg

TLG_CLLG_F_P1.jpg

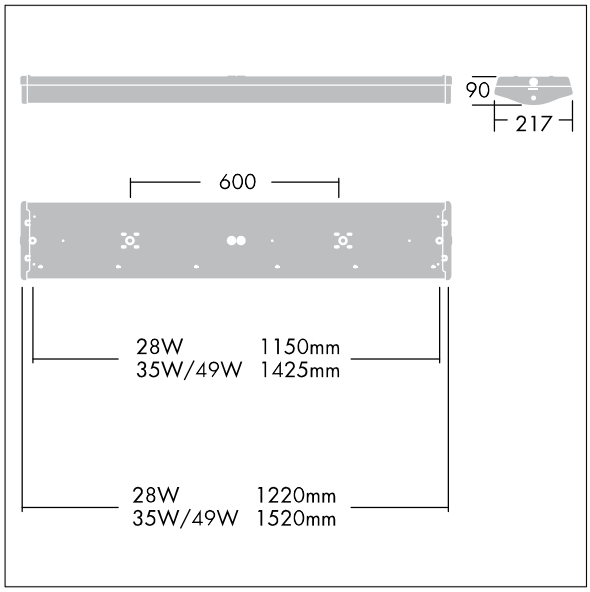

TLG_DFLX_M_LD2.wmf

All values marked with an * are rated values. Unless stated otherwise, the values apply to an ambient temperature of 25°C.

Thorn Lighting is constantly developing and improving its products. The right is reserved to change specifications without prior notification or public announcement.
© Thorn Lighting