New Folder

96642614 <CHAL PRO LED1600-940 HF RMB W6

IP20 IP54 | IK03 | 850°C | Ta25

New Folder

A recessed LED downlight. Remote fixed output control gear. IP54 (IP20 from above), Class I electrical. Body: aluminium, painted. Reflector: mirrorbrite. Suitable for mounting in ceiling thicknesses of 1-40mm in a Ø150mm cut-out. Complete with 4000K LED.

Dimensions: Ø172 x 94 mm
Luminaire input power: 18.1 W
Luminaire luminous flux: 1600 lm
Luminaire efficacy: 88 lm/W
Weight: 0.49 kg

TLG_CHLP_F_RMBPDB.jpg

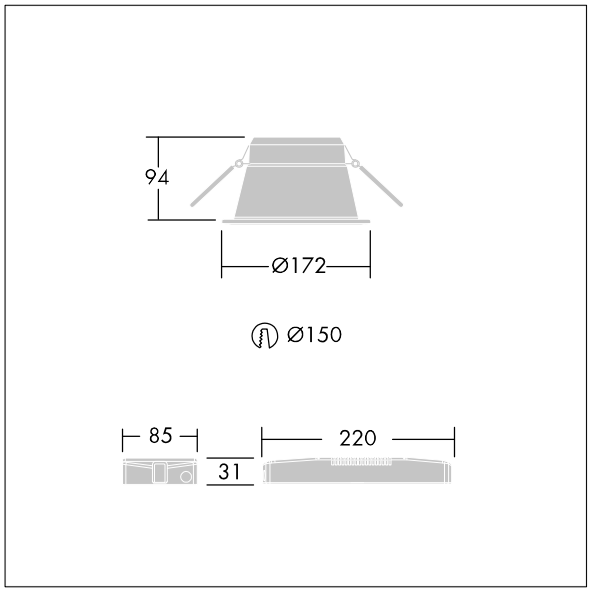

TLG_CHLP_M_DL1.wmf

All values marked with an * are rated values. Thorn uses tried and tested components from leading suppliers, however there may be isolated instances of technology-related failures of individual LEDs during the rated product lifetime. International standards set the tolerance in initial flux and connected load at ±10%. Unless stated otherwise, the values apply to an ambient temperature of 25°C.

Thorn Lighting is constantly developing and improving its products. The right is reserved to change specifications without prior notification or public announcement.
© Thorn Lighting