Primata Pro

96627397 <PR PRO L1473 LED 5000-840 HF AC WH

IP20 | halogen | ⏚ | CE

Primata Pro

Energy efficient LED batten luminaire for use with Primata II trunking system. Body: steel sheet, painted white. Diffuser: extruded acrylic. Class I electrical, IP20. Attaches to trunking via two turnbuckles, providing instant electrical connection via fixed plug and socket. Phase selection at connector. Complete with 4000K LED

Dimensions: 1473 x 60 x 110 mm
Luminaire input power: 38 W
Luminaire luminous flux: 5040 lm
Luminaire efficacy: 133 lm/W
Weight: 1.9 kg

TLG_PM2L_F_LEDPDB.jpg

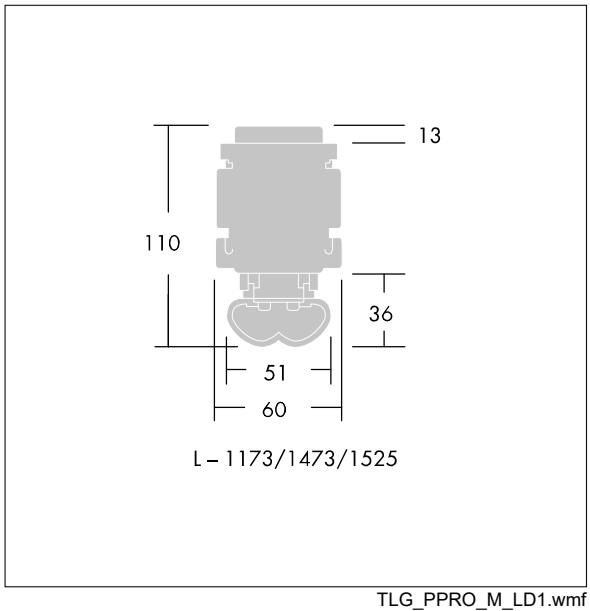

TLG_PPRO_M_LD1.wmf

All values marked with an * are rated values. Thorn uses tried and tested components from leading suppliers, however there may be isolated instances of technology-related failures of individual LEDs during the rated product lifetime. International standards set the tolerance in initial flux and connected load at ±10%. Unless stated otherwise, the values apply to an ambient temperature of 25°C.

Thorn Lighting is constantly developing and improving its products. The right is reserved to change specifications without prior notification or public announcement.
© Thorn Lighting

Primata Pro

96627397 <PR PRO L1473 LED 5000-840 HF AC WH

Thorn Lighting is constantly developing and improving its products. The right is reserved to change specifications without prior notification or public announcement.
© Thorn Lighting