THORN

96270312 <STYLED S 24L70 WS 740 CL1

IP66	IK08	⏚	CE

A stylish, IP66, Class I electrical, road lighting lantern with 24 LEDs driven at 700mA with Wide Street distribution in a short body outline. Body and bracket in die-cast aluminium, powder coated texturised light grey (close to RAL 9006). Flat toughened glass enclosure, self-cleaning treatment available on request. Mounting via complementary brackets, available separately, onto Ø60 x 90mm long spigot. Wall or mid-pole brackets are also available. Complete with 4000K LED

Dimensions: 720 x 494 x 74 mm
Luminaire input power: 58 W
Luminaire luminous flux: 5441 lm
Luminaire efficacy: 94 lm/W
Weight: 12.8 kg
Scx: 0.08 m²

TLG_STYL_F_SHSHPDB.jpg

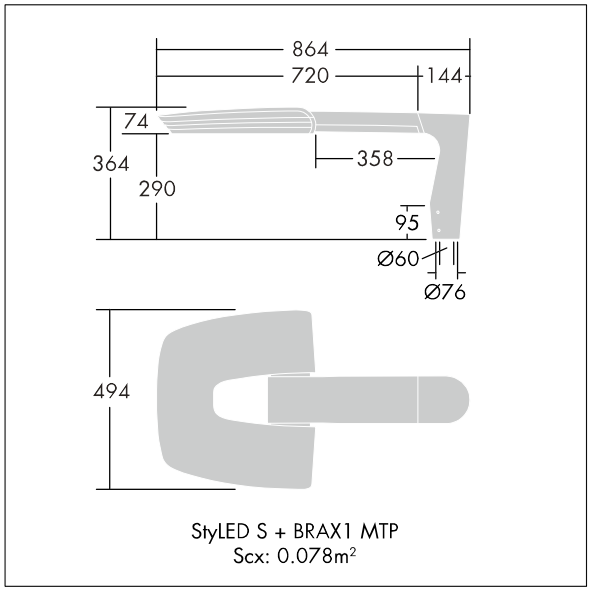

TLG_STYL_M_LDSSHBSG.wmf

This product contains a light source of energy efficiency class D.

All values marked with an * are rated values. Thorn uses tried and tested components from leading suppliers, however there may be isolated instances of technology-related failures of individual LEDs during the rated product lifetime. International standards set the tolerance in initial flux and connected load at ±10%. Unless stated otherwise, the values apply to an ambient temperature of 25°C.

Thorn Lighting is constantly developing and improving its products. The right is reserved to change specifications without prior notification or public announcement.
© Thorn Lighting

THORN

96270312 <STYLED S 24L70 WS 740 CL1

Thorn Lighting is constantly developing and improving its products. The right is reserved to change specifications without prior notification or public announcement.
© Thorn Lighting