Sydra F

96221665 <SYDRA F 18L50-740 CL1 4,5M MTP60

IP66	IK09		CE

Sydra F

A decorative LED lantern with a Symmetrical distribution giving highly comfortable light for amenity applications. Electronic, bi-power control gear driving 18 LEDs at 500mA. Equipped with 50% power reduction circuit, effective 3 hours before and 5 hours after a calculated midnight. It can be deactivated at installation with an easily accessible internal switch. Class I electrical, IP66, IK09. Base and top cover: aluminium. Canopy: flat, ABS plastic. Diffuser: opal Tarflon®. Canopy and base powder coated pearl light grey. To be post-top mounted on a Ø60mm column, secured by 5mm Allen screw. Pre-wired with 4,5m H07-RNF cable. Complete with 4000K LED.

Dimensions: Ø705/60 x 465 mm
Luminaire input power: 30 W
Weight: 7.4 kg
Scx: 0.06 m²

TLG_SYDF_F_PDBLIT.jpg

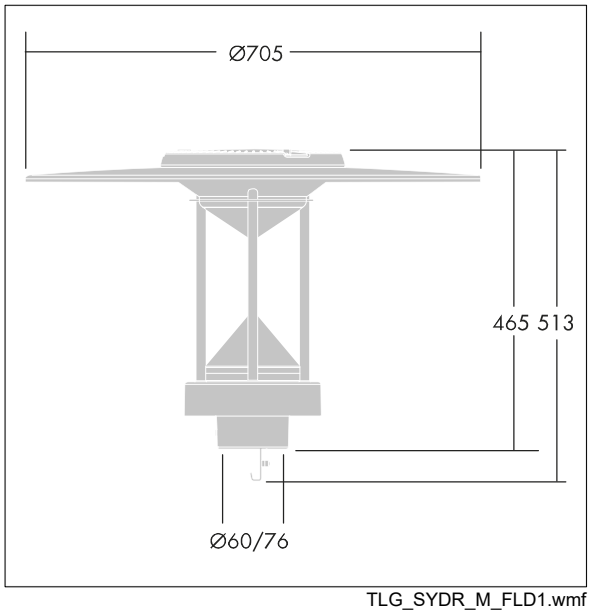

TLG_SYDR_M_FLD1.wmf

All values marked with an * are rated values. Thorn uses tried and tested components from leading suppliers, however there may be isolated instances of technology-related failures of individual LEDs during the rated product lifetime. International standards set the tolerance in initial flux and connected load at ±10%. Unless stated otherwise, the values apply to an ambient temperature of 25°C.

Thorn Lighting is constantly developing and improving its products. The right is reserved to change specifications without prior notification or public announcement.
© Thorn Lighting

Sydra F

96221665 <SYDRA F 18L50-740 CL1 4,5M MTP60

Thorn Lighting is constantly developing and improving its products. The right is reserved to change specifications without prior notification or public announcement.
© Thorn Lighting