THORN

96264341 CESAR RECT 3L70 1WD 840

IP65	IK06		CE			T_a25

Compact LED cuboid floodlight. Electronic, fixed output control gear. Class I electrical, IP65, IK06. Body: die-cast aluminium painted grey. Front cover: 4mm thick tempered glass. Fixing plate: polycarbonate. Electrical connection via 2 pole terminal block. Complete with 4000K LED

Dimensions: 265 x 100 x 110 mm
Luminaire input power: 8 W
Weight: 2.1 kg

TLG_AXYL_F_RECT2WD.jpg

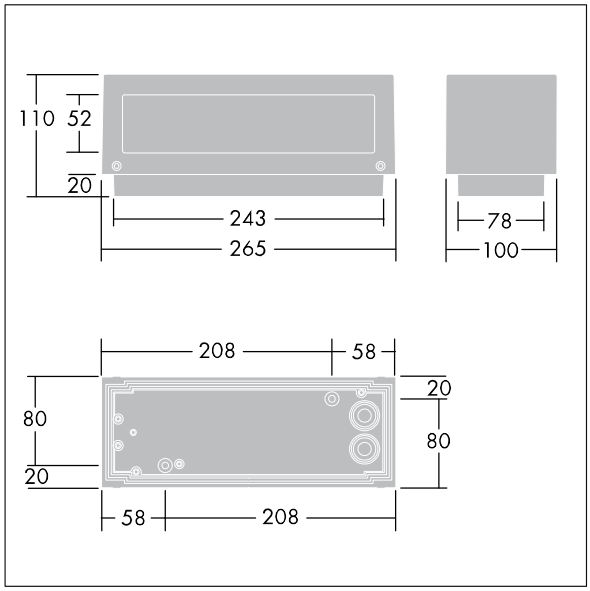

TLG_AXYL_M_LDRECT1.wmf

This product contains a light source of energy efficiency class E.

All values marked with an * are rated values. Thorn uses tried and tested components from leading suppliers, however there may be isolated instances of technology-related failures of individual LEDs during the rated product lifetime. International standards set the tolerance in initial flux and connected load at ±10%. Unless stated otherwise, the values apply to an ambient temperature of 25°C.

Thorn Lighting is constantly developing and improving its products. The right is reserved to change specifications without prior notification or public announcement.
© Thorn Lighting

THORN

96264341 CESAR RECT 3L70 1WD 840

Thorn Lighting is constantly developing and improving its products. The right is reserved to change specifications without prior notification or public announcement.
© Thorn Lighting