Contrast 2 LED

96263242 <CONT2 M 12L70 BU A/S

ISO 9223 C3	IP66	IK08	⧈	CE

Contrast 2 LED

A compact architectural LED Bracket mounted with asymmetrical light distribution. Class II electrical, IP66, IK08. Body and Frame: aluminium die casting alloy, sanded silver grey 150. Glass: tempered 4mm thick. Gasket: EPDM. Complete with blue LED

With integral power supply.

Dimensions: 355 x 195 x 95 mm
Luminaire input power: 28.9 W
Weight: 3.91 kg

TLG_CONL_F_M50X50PDB.jpg

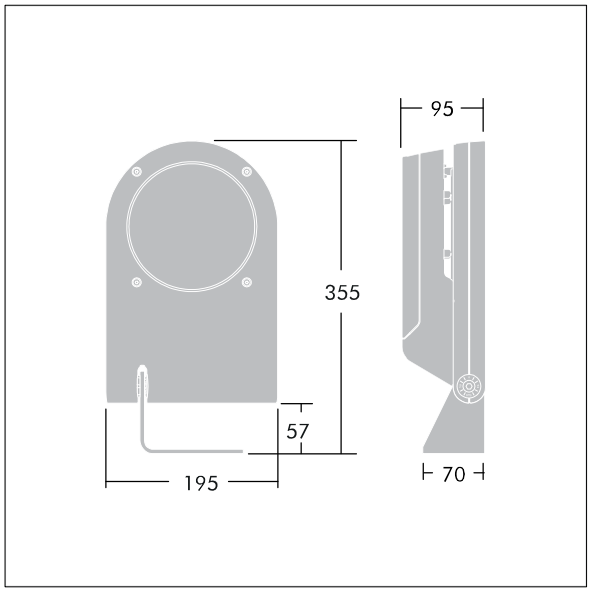

TLG_CON2_M_LDM mod.wmf

All values marked with an * are rated values. Thorn uses tried and tested components from leading suppliers, however there may be isolated instances of technology-related failures of individual LEDs during the rated product lifetime. International standards set the tolerance in initial flux and connected load at ±10%. Unless stated otherwise, the values apply to an ambient temperature of 25°C.

Thorn Lighting is constantly developing and improving its products. The right is reserved to change specifications without prior notification or public announcement.
© Thorn Lighting

Contrast 2 LED

96263242 <CONT2 M 12L70 BU A/S

Thorn Lighting is constantly developing and improving its products. The right is reserved to change specifications without prior notification or public announcement.
© Thorn Lighting