GTLED

96220741 GTLED 72L70 741 S/S TW 2M25

IP66	⏚	CE	T_a50

GTLED

An advanced LED tunnel luminaire for high luminance level applications. Electronic, fixed output control gear - the driver is fused and is accompanied by a surge protection device. Body: extruded aluminium, powder coated white. To be surface mounted to ceiling or wall with optional bracket 96220745, special brackets available on request. Light distribution: Symmetrical. Through wiring of 5x6mm² cable is possible through M25 cable glands (suitable for cable Ø13-18mm). Class I electrical, IP66.. Complete with 4100K LED

Due to the unique calculation requirements of this product the photometric data is not provided here but design advice may be obtained from your local representative.

Dimensions: 1028 x 316 x 98 mm
Luminaire input power: 164.5 W
Weight: 20.3 kg

TLG_GTLD_F_P2.jpg

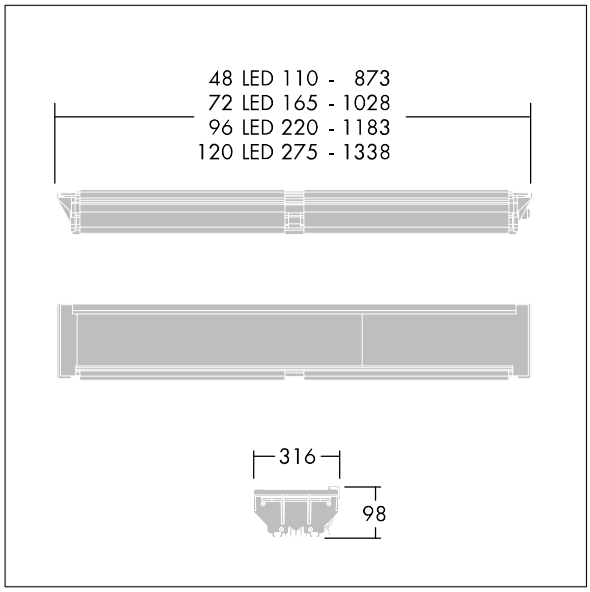

TLG_GTLD_M_LD3.wmf

All values marked with an * are rated values. Thorn uses tried and tested components from leading suppliers, however there may be isolated instances of technology-related failures of individual LEDs during the rated product lifetime. International standards set the tolerance in initial flux and connected load at ±10%. Unless stated otherwise, the values apply to an ambient temperature of 25°C.

Thorn Lighting is constantly developing and improving its products. The right is reserved to change specifications without prior notification or public announcement.
© Thorn Lighting