# Discontinued

## 96210469 <EYE VIS 1000 LED HF E3 OP L ANT L840

| | | | | | | | | | |
|---|---|---|---|---|---|---|---|---|---|
| EN 55015 | IP65 | IK10 | | CE | | | | 850°C | $T_a$ 0 +25 |

## Discontinued

Round, impact resistant LED bulkhead luminaire. Electronic, fixed output control gear with 3 hour, manual test, LED emergency lighting circuit. Class I electrical, IP65, IK10. Body: large size, die-cast aluminium (LM6), powder coated anthracite. Diffuser: opal polycarbonate with die-cast aluminium visor feature. Electrical connection via 4 x 2 x 2.5mm² terminal block. Complete with 4000K LED

Dimensions: Ø340 x 155 mm
Luminaire input power: 17 W
Weight: 3.6 kg

TLG_EYKN_F_LGVSANTHOP.jpg

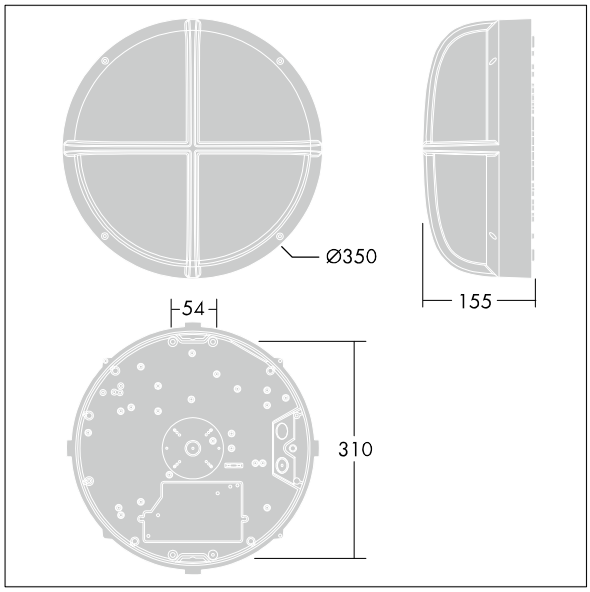


TLG_EYKN_M_LGE.wmf

This product contains a light source of energy efficiency class C.

All values marked with an * are rated values. Thorn uses tried and tested components from leading suppliers, however there may be isolated instances of technology-related failures of individual LEDs during the rated product lifetime. International standards set the tolerance in initial flux and connected load at ±10%. Unless stated otherwise, the values apply to an ambient temperature of 25°C.

Thorn Lighting is constantly developing and improving its products. The right is reserved to change specifications without prior notification or public announcement.
© Thorn Lighting