# Discontinued

## 96210424 <EYE HA 750 LED HF MWS CORR OP L ANT L84

| EN 55015 | IP65 | IK10 | | | | | 850°C | $T_a$ -20 +35 |
|---|---|---|---|---|---|---|---|---|

## Discontinued

Round, impact resistant LED bulkhead luminaire. Electronic, corridor function control gear. Class I electrical, IP65, IK10. Body: large size, die-cast aluminium (LM6), powder coated anthracite. Diffuser: opal polycarbonate with die-cast aluminium halo-visor feature. Electrical connection via 3 x 2 x 2.5mm² terminal block. Integral presence detector for dimming control (corridor function). Complete with 4000K LED

Dimensions: Ø340 x 155 mm
Luminaire input power: 12 W
Weight: 3.6 kg

TLG_EYKN_F_LGHLOVSANTHOP.jpg

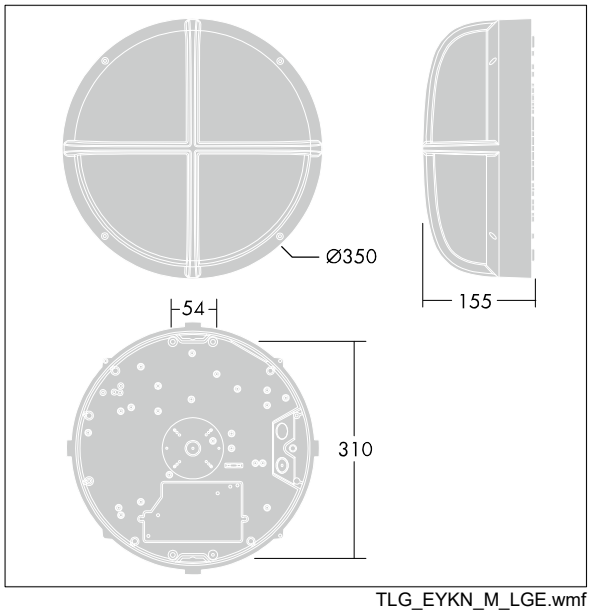


TLG_EYKN_M_LGE.wmf

All values marked with an * are rated values. Thorn uses tried and tested components from leading suppliers, however there may be isolated instances of technology-related failures of individual LEDs during the rated product lifetime. International standards set the tolerance in initial flux and connected load at ±10%. Unless stated otherwise, the values apply to an ambient temperature of 25°C.

Thorn Lighting is constantly developing and improving its products. The right is reserved to change specifications without prior notification or public announcement.
© Thorn Lighting

# Discontinued

## 96210424 <EYE HA 750 LED HF MWS CORR OP L ANT L84

Thorn Lighting is constantly developing and improving its products. The right is reserved to change specifications without prior notification or public announcement.
© Thorn Lighting