Diffusalux

96549151 <DIFFUSALUX 2X49W HFI PS CL L840

	IP20	IK03		CE	650°C

Diffusalux

High performance IP20 surface mounted general purpose fluorescent luminaire for 2 x 49W Light Source: 2 x T16 / 49W lamp(s) with Electronic, circuit. Body in white painted steel, endcaps in white polycarbonate with a curved, precision extruded clear prismatic polystyrene diffuser. Ø21.5mm cable entry hole in the centre of the back spine with optional cable entry through each end cap. Fitting supplied with innovative "quick fix" horseshoe and sliding washers for direct screw fixing to surface, fixing centres 1425mm. Standard BESA fixings. Can be suspended using wire suspension accessory kit (to be ordered separately). 5 x 2 x 2,5mm² piano key terminal block. Complete with 840 lamp(s).

Dimensions: 1520 x 217 x 90 mm
Luminaire input power: 106 W
Weight: 3.5 kg

TLG_DFX2_F_ODL.jpg

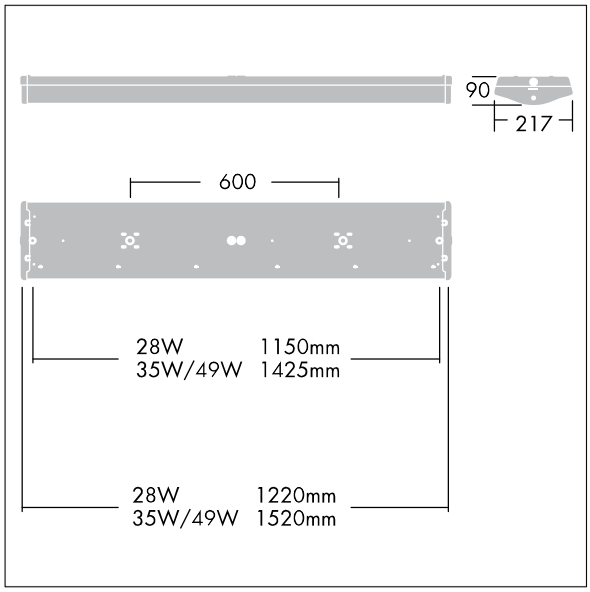

TLG_DFLX_M_LD2.wmf

All values marked with an * are rated values. Unless stated otherwise, the values apply to an ambient temperature of 25°C.

Thorn Lighting is constantly developing and improving its products. The right is reserved to change specifications without prior notification or public announcement.
© Thorn Lighting

Diffusalux

96549151 <DIFFUSALUX 2X49W HFI PS CL L840

Thorn Lighting is constantly developing and improving its products. The right is reserved to change specifications without prior notification or public announcement.
© Thorn Lighting