Discontinued

96548643 <CHALICE 190H ALU 1x32W TC-TEL HF E3 L84

	IP20		CE	850°C	T_a 5 25

Discontinued

A shallow, ceiling recessed downlight with a variety of decorative attachments. For 1 x 32W Light Source: 1 x TC-TEL / 32W lamp(s). Electronic, fixed output control gear with 3 hour, manual test, LED emergency lighting circuit. Body and mounting clips: polycarbonate, black. Bezel: polycarbonate, white. Reflector: satinbrite aluminium. Adjustable fixing clips suitable for ceiling thicknesses from 1-25mm. No tools required. Cut-out Ø190mm. Electrical connection to 4 x 2 x 2.5mm² terminal block. Class I electrical. IP20. Complete with 840 lamp(s).

Dimensions: Ø205 x 100 mm
Luminaire input power: 33.7 W
Weight: 1.1 kg

TLG_CHLC_F_190H2X26WALUE3LIT.jpg

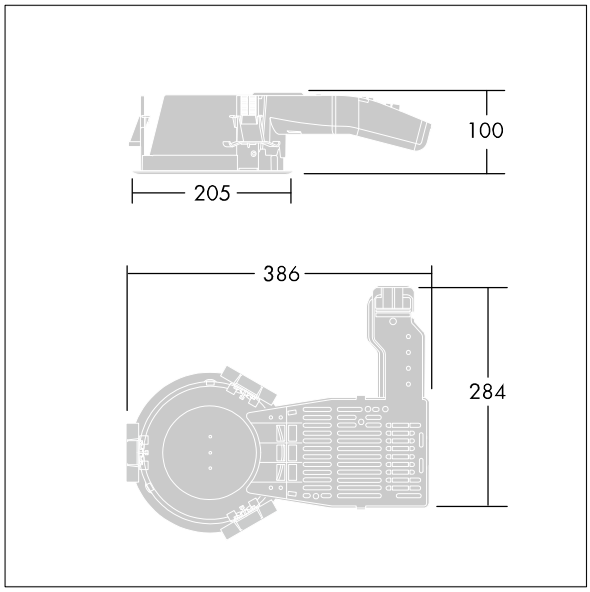

TLG_CHLC_M_LD190CFL.wmf

All values marked with an * are rated values. Thorn uses tried and tested components from leading suppliers, however there may be isolated instances of technology-related failures of individual LEDs during the rated product lifetime. International standards set the tolerance in initial flux and connected load at ±10%. Unless stated otherwise, the values apply to an ambient temperature of 25°C.

Thorn Lighting is constantly developing and improving its products. The right is reserved to change specifications without prior notification or public announcement.
© Thorn Lighting

Discontinued

96548643 <CHALICE 190H ALU 1x32W TC-TEL HF E3 L84

Thorn Lighting is constantly developing and improving its products. The right is reserved to change specifications without prior notification or public announcement.
© Thorn Lighting