Leopard

96239807 <LEOPARD 1X28WTC-DDELHF MWS E3OPSQ BK L8

IP65	IK10		CE	850°C	T_a25

Leopard

A square bulkhead luminaire, with emergency lighting function, for 1 x 28W Light Source: 1 x TC-DDEL / 28W lamp. Combined HF & EM SC circuit with Self contained luminaire, manual test (3 hours) emergency circuit. black body with opal polycarbonate plastic diffuser. Electrical safety class I. Ingress protection IP65. With integral motion/daylight sensor for on/off control. Supplied with 840 lamp.

Dimensions: 266 x 266 x 101 mm
Luminaire input power: 26 W
Weight: 2.9 kg

TLG_LPRD_F_LSBO.jpg

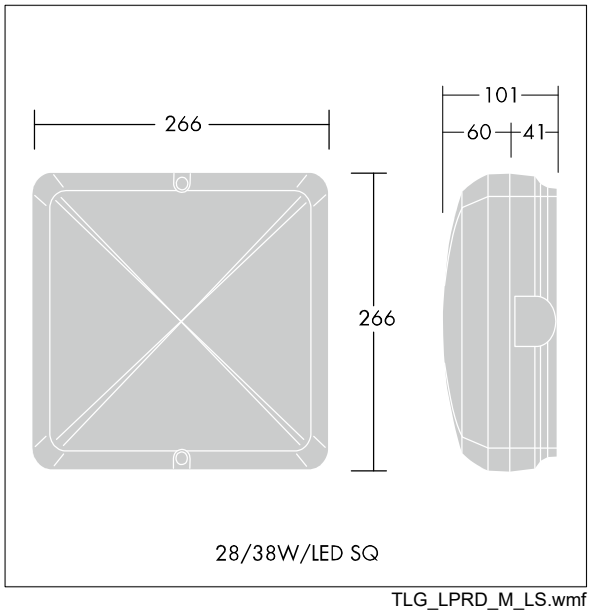

TLG_LPRD_M_LS.wmf

All values marked with an * are rated values. Unless stated otherwise, the values apply to an ambient temperature of 25°C.

Thorn Lighting is constantly developing and improving its products. The right is reserved to change specifications without prior notification or public announcement.
© Thorn Lighting