Titus Sport

96547458 TITUS SPORT 4X80W L840

IP21	IP23	IK09	⏚	CE	T_a25

Dedicated sports hall luminaires for T5 lamps for surface or suspended mounting

Surface luminaire for 4 x 80W Light Source: 4 x T16 / 80W lamp with circuit. White powder painted galvanised steel body with Miro finish specular aluminium reflector and hinged galvanised steel wire guard. Side access hatch for electrical connection. Suitable for surface or catenary mounting, and tilting up to 50 degrees without rotational torque. Robust construction satisfies DIN 18032.3 standard for Sports Halls. Optional louvre attachments are available.

Dimensions 1534 x 231 x 157mm
Luminaire input power: 333.2 W
Weight: 9.1 kg

TLG_TITU_P_SP1.jpg

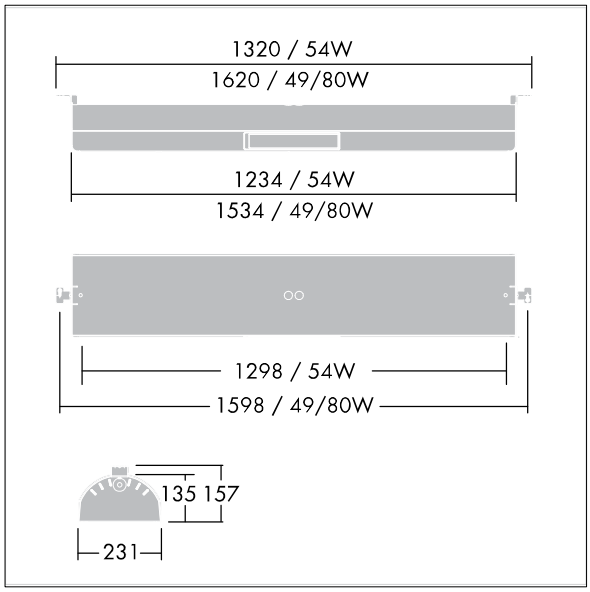

TLG_TITU_M_SPLD1.wmf

All values marked with an * are rated values. Unless stated otherwise, the values apply to an ambient temperature of 25°C.

Thorn Lighting is constantly developing and improving its products. The right is reserved to change specifications without prior notification or public announcement.
© Thorn Lighting

Titus Sport

96547458 TITUS SPORT 4X80W L840

Thorn Lighting is constantly developing and improving its products. The right is reserved to change specifications without prior notification or public announcement.
© Thorn Lighting