96547488 EYE CR 1X38W TC-DDEL HF OP L SIL L840

IP65 | IK10 | 960°C | T_a -15 +35

Round, vandal resistant bulkhead luminaire for 1x38W Light Source: 1 x TC-DDEL / 38W lamp(s) with electronic - fixed output ballast. Class I electrical, IP65, IK10. Body, large size, in die-cast aluminium (LM6), powder coated silver-grey. Diffuser in opal polycarbonate. With die-cast aluminium cross feature. To be wall or ceiling mounted, electrical connection via 3 x 2 x 2.5mm² terminal block. Complete with 840 lamp(s).

Dimensions: Ø340 x 155 mm
Luminaire input power: 40 W
Weight: 2.6 kg

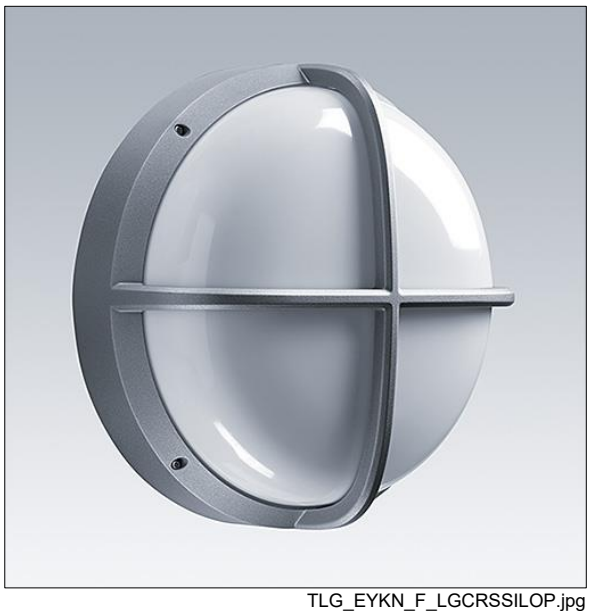

TLG_EYKN_F_LGCRSSILOP.jpg

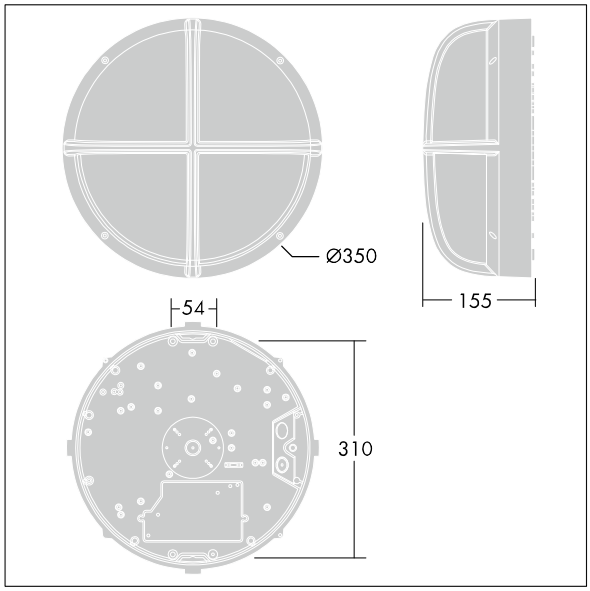

TLG_EYKN_M_LGE.wmf

All values marked with an * are rated values. Unless stated otherwise, the values apply to an ambient temperature of 25°C.

Thorn Lighting is constantly developing and improving its products. The right is reserved to change specifications without prior notification or public announcement.
© Thorn Lighting

96547488 EYE CR 1X38W TC-DDEL HF OP L SIL L840

Thorn Lighting is constantly developing and improving its products. The right is reserved to change specifications without prior notification or public announcement.
© Thorn Lighting