Supertrack 2

96108071 <SUPERTRACK2 T-CONNECTOR 3C P O-L BK

Supertrack 2

T-shaped feed allowing electrical connection of cables to a track system whilst connecting three tracks. Plastic parts are black polycarbonate. Maximum current 16A per phase. For recessed track systems use the appropriate recessed cover.

Dimensions: 102 x 68 x 34 mm (installed)

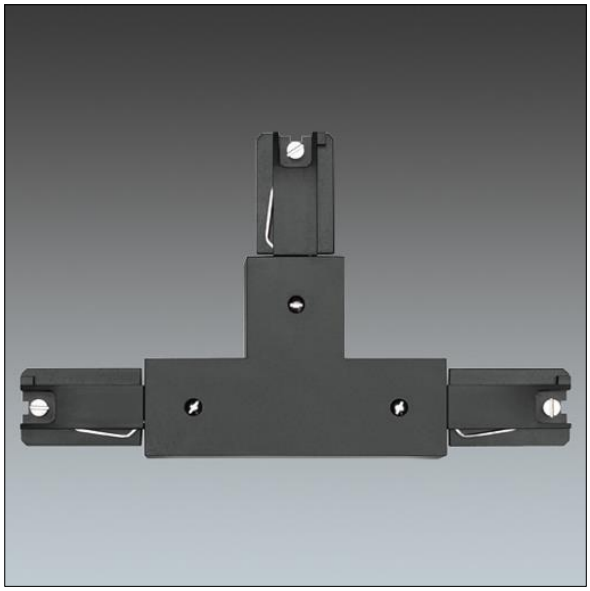

TLG_TRKS_F_2TCONECTPOLBKOUTSIDELT.jpg

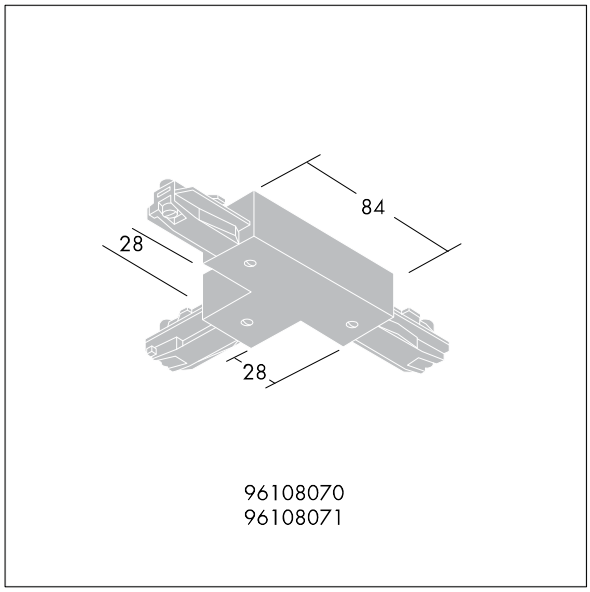

TLG_TRKS_M_TCNNCTRL.wmf

Thorn Lighting is constantly developing and improving its products. The right is reserved to change specifications without prior notification or public announcement.
© Thorn Lighting