Discontinued

96255786 AREA1 150W HIT-CE/L830 PM ANT STR

IP65	IK08	⏚	CE

Discontinued

A high performance, general purpose, area floodlight for 1 x 150W Light Source: 1 x HIT-CE (E40) / 150W lamp with magnetic control gear. IP65, IK08, Class I electrical. Recyclable die-cast aluminium AS12 (LM6) body finished powder coated anthracite grey with 5mm thick toughened glass front cover. Integrated visor for precise lighting control. High reflectivity, pre-anodised, high grade aluminium street optic. Reversable mounting stirrup supplied, optional spigot adaptors for post top mounting. Equipped with Mini Photocell. Complete with 830 lamp(s).

Ta rating shown is indicative and may change according to mounting position, please see installation instructions for further details.

Dimensions: 477 x 368 x 206 mm
Luminaire input power: 169 W
Weight: 9.5 kg
Windage: 0.044m²

TLG_AFLD_F_HOE3.jpg

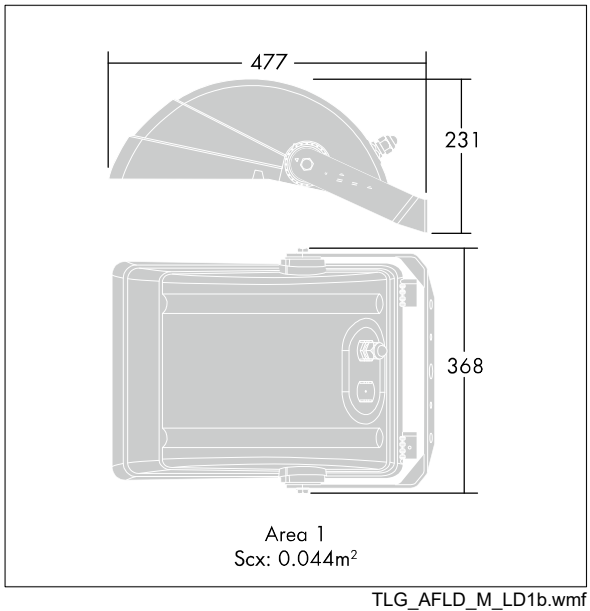

TLG_AFLD_M_LD1b.wmf

All values marked with an * are rated values. Unless stated otherwise, the values apply to an ambient temperature of 25°C.

Thorn Lighting is constantly developing and improving its products. The right is reserved to change specifications without prior notification or public announcement.
© Thorn Lighting

Discontinued

96255786 AREA1 150W HIT-CE/L830 PM ANT STR

Thorn Lighting is constantly developing and improving its products. The right is reserved to change specifications without prior notification or public announcement.
© Thorn Lighting