Voyager Sigma

96233878 <VOYAGER SIGMA LEG EU RIGHT

CE	650°C	T_a35

Versatile exit sign with low-maintenance LED option

Self adhesive emergency exit legend for Voyager Sigma luminaires with a viewing distance of.

TLG_VSIG_F_LEGEUR.jpg

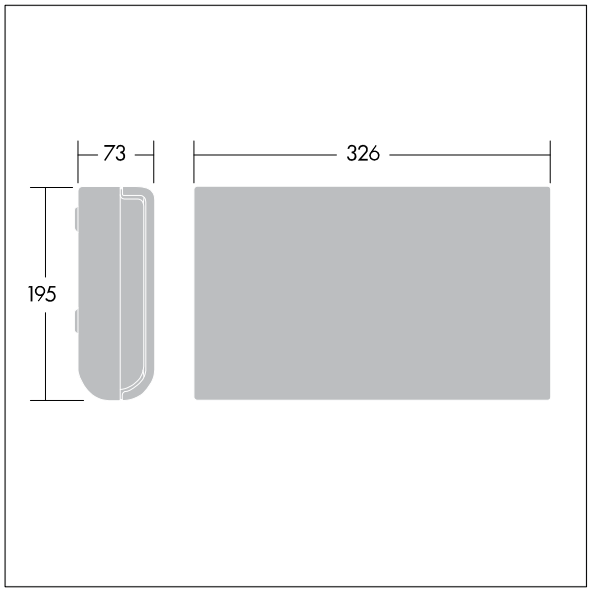

TLG_VYSG_M_LD1.wmf

All values marked with an * are rated values. Unless stated otherwise, the values apply to an ambient temperature of 25°C.

Thorn Lighting is constantly developing and improving its products. The right is reserved to change specifications without prior notification or public announcement.
© Thorn Lighting