Primata 2 Trunking

96502640 <PR2 T TW 4578 7x2,5/58

IP20	⏚	CE	

.

Primata II pre-wired trunking with 7 pole integrated wiring. Electrical connection points in modular distance for 58W luminaires.

Dimensions: 4578 x 60 x 51 mm
Weight: 5.76 kg

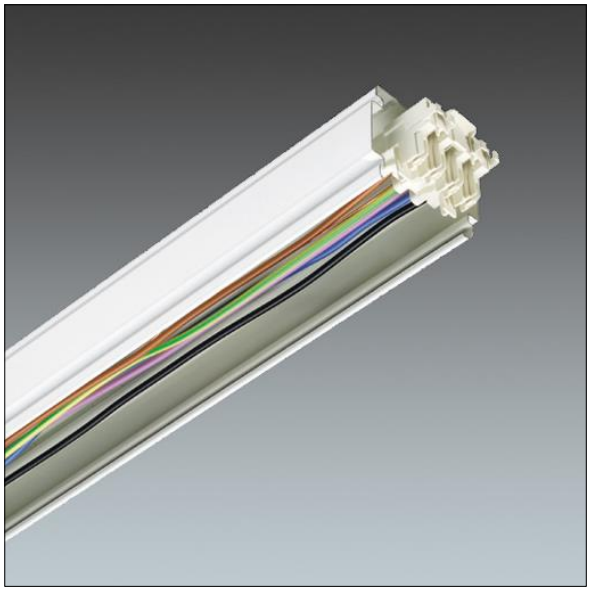

TLG_PMTA_F_TR.jpg

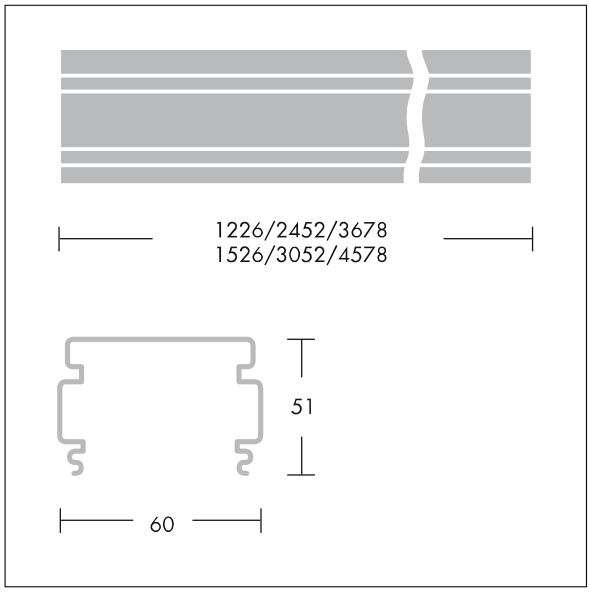

TLG_PMTA_M_TRT26.wmf

Thorn Lighting is constantly developing and improving its products. The right is reserved to change specifications without prior notification or public announcement.
© Thorn Lighting