Cesar

96231453 <CESAR 1 CIRC 2X3L35 10D BU

IP65	IK08	⏚	CE

Cesar's simple, cylindrical style, available in four sizes, offers a choice of adjustable light sources and superior highlighting

A robust, wall-mounted up/downlight with 2 x 3W blue Light Source: LEDs. The grey aluminium body, with integral gear and sealed to IP65, offers an aesthetic design both by day and by night.

Dimensions: 145 x 235 x 90 mm
Luminaire input power: 3 W
Weight: 1.94 kg

TLG_CESA_F_LED1.jpg

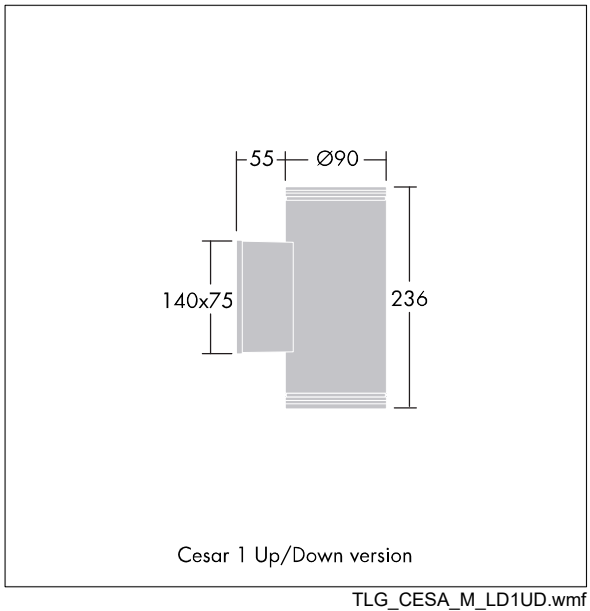

TLG_CESA_M_LD1UD.wmf

All values marked with an * are rated values. Thorn uses tried and tested components from leading suppliers, however there may be isolated instances of technology-related failures of individual LEDs during the rated product lifetime. International standards set the tolerance in initial flux and connected load at ±10%. Unless stated otherwise, the values apply to an ambient temperature of 25°C.

Thorn Lighting is constantly developing and improving its products. The right is reserved to change specifications without prior notification or public announcement.
© Thorn Lighting