Leopard

96230492 <LEOPARD 1X28W TC-DDEL HF E3 PR SQ WHI 4

IP65	IK10	⏚	CE	850°C	T_a25	

A range of low energy square and round bulkheads integral emergency available in black or white with a choice of diffuser options.

A square bulkhead luminaire, with emergency lighting function, for 1 x 28W Light Source: 1 x TC-DDEL / 28W lamp. Combined HF & EM SC circuit with Self contained luminaire, manual test (3 hours) emergency circuit. white body with prismatic polycarbonate plastic diffuser. Electrical safety class I. Ingress protection IP65. Supplied with 840 lamp.

Dimensions: 266 x 266 x 101 mm
Luminaire input power: 26 W
Weight: 2.8 kg

TLG_LPRD_F_LSWP.jpg

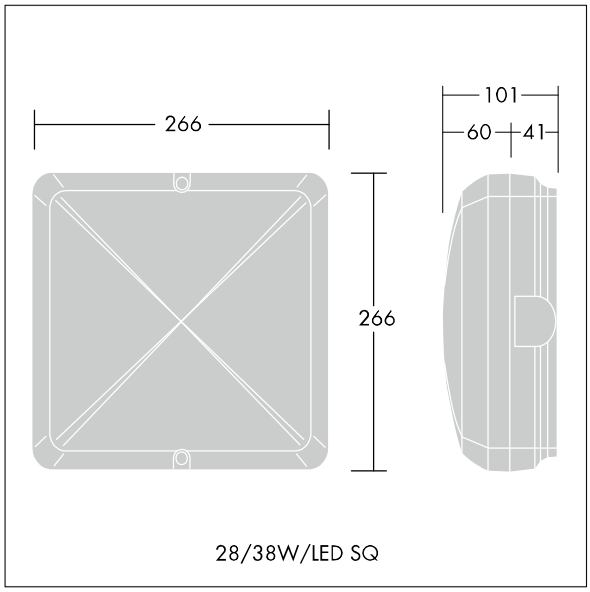

TLG_LPRD_M_LS.wmf

All values marked with an * are rated values. Unless stated otherwise, the values apply to an ambient temperature of 25°C.

Thorn Lighting is constantly developing and improving its products. The right is reserved to change specifications without prior notification or public announcement.
© Thorn Lighting