# Leopard

## 96230500 <LEOPARD 1X28W TC-DDEL HF PR SQ WHI L840

| | | | | | | |
|---|---|---|---|---|---|---|
| IP65 | IK10 | ⏚ | CE | 850°C | $T_a$25 | |

A range of low energy square and round bulkheads available in black or white with a choice of size and diffuser options.

A square bulkhead luminaire for 1 x 28W  Light Source: 1 x TC-DDEL / 28W lamp. electronic - fixed output circuit. white body with prismatic polycarbonate plastic diffuser. Electrical safety class I.  Ingress protection IP65.  Supplied with 840 lamp.

Dimensions: 266 x 266 x 101 mm
Luminaire input power: 25 W
Weight: 1.8 kg

TLG_LPRD_F_LSWP.jpg

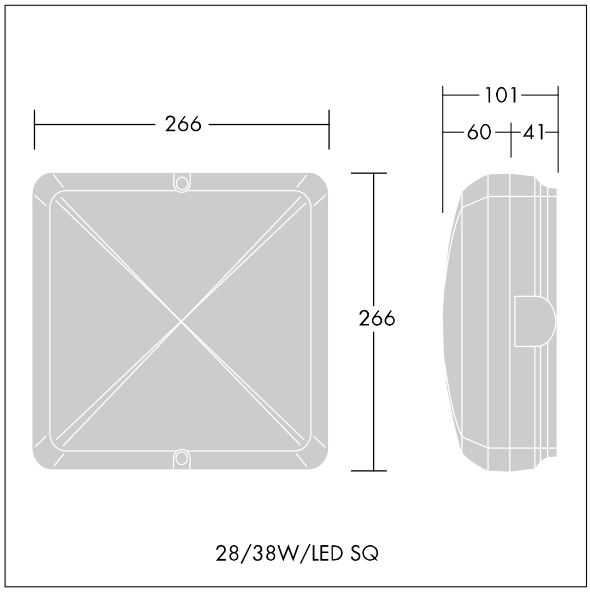


TLG_LPRD_M_LS.wmf

All values marked with an * are rated values. Unless stated otherwise, the values apply to an ambient temperature of 25°C.

Thorn Lighting is constantly developing and improving its products. The right is reserved to change specifications without prior notification or public announcement.
© Thorn Lighting