# Popular Range Battens

## 96229562 <POPPACK BATTEN 1X70W T26 HF E3 L840

| | | | | |
|---|---|---|---|---|
| IP20 | ⏚ | CE | 850°C | $T_a$25 |

### Popular Range Battens

Batten luminaire with integral emergency lighting facility for 1 x 70W  Light Source: 1 x T26 / 70W lamp. electronic - fixed output  circuit with  emergency circuit.  steel - white stoved enamel.

Dimensions: 1800 x 60 x 82 mm
Luminaire input power: 68 W
Weight: 3.45 kg

TLG_POPR_F_BS.jpg

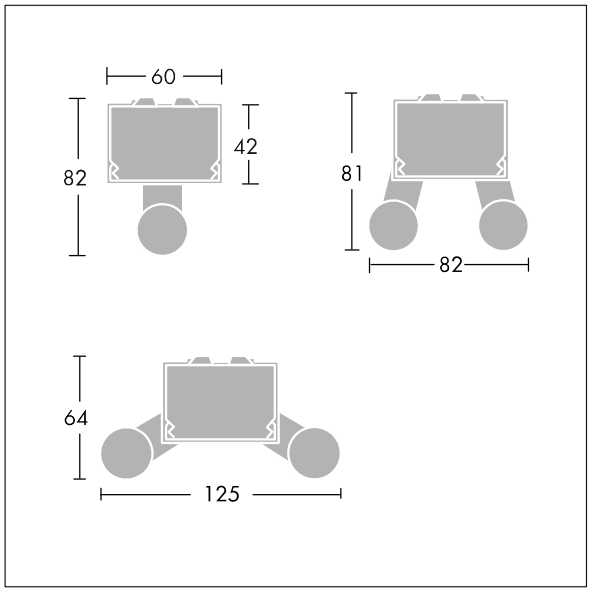


TLG_POPR_M_LD1.wmf

All values marked with an * are rated values. Unless stated otherwise, the values apply to an ambient temperature of 25°C.

Thorn Lighting is constantly developing and improving its products. The right is reserved to change specifications without prior notification or public announcement.
© Thorn Lighting