# Popular Range Battens

## 96229560 <POPPACK BATTEN 1X36W T26 HF E3 L840

| | | | | |
|---|---|---|---|---|
| IP20 | ⏚ | CE | 850°C | $T_a$25 |

### Popular Range Battens

Batten luminaire with integral emergency lighting facility for 1 x 36W Light Source: 1 x T26 / 36W lamp. Combined HF & EM SC circuit with emergency circuit. steel - white stoved enamel.

Dimensions: 1200 x 60 x 82 mm
Luminaire input power: 39 W
Weight: 2.75 kg

TLG_POPR_F_BS.jpg

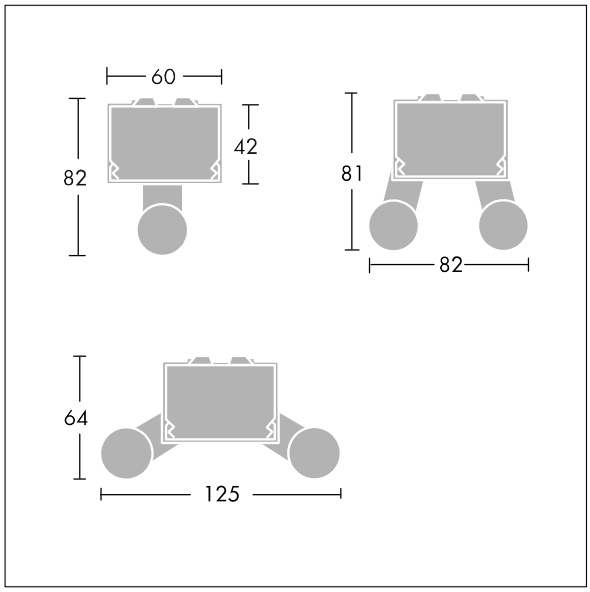


TLG_POPR_M_LD1.wmf

All values marked with an * are rated values. Unless stated otherwise, the values apply to an ambient temperature of 25°C.

Thorn Lighting is constantly developing and improving its products. The right is reserved to change specifications without prior notification or public announcement.
© Thorn Lighting

# Popular Range Battens

## 96229560 <POPPACK BATTEN 1X36W T26 HF E3 L840

Thorn Lighting is constantly developing and improving its products. The right is reserved to change specifications without prior notification or public announcement.
© Thorn Lighting