# Popular Range Battens

## 96229555 <POPPACK BATTEN 1X58W T26 HF L840

IP20 | 850°C | $T_a$25

## Popular Range Battens

Batten luminaire for 1 x 58W Light Source: 1 x T26 / 58W lamp. electronic - fixed output circuit. steel - white stoved enamel. Complete with 840 lamp(s).

Dimensions 1500 x 60 x 82mm
Luminaire input power: 54 W
Weight: 2.05 kg

TLG_POPR_F_BS.jpg

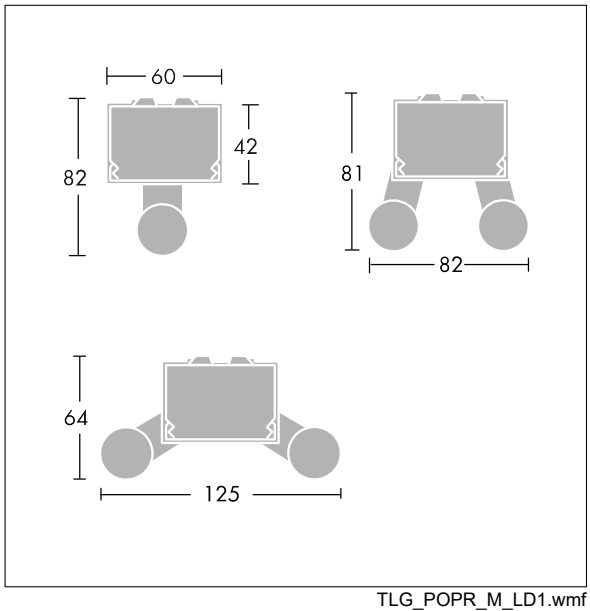


TLG_POPR_M_LD1.wmf

All values marked with an * are rated values. Unless stated otherwise, the values apply to an ambient temperature of 25°C.

Thorn Lighting is constantly developing and improving its products. The right is reserved to change specifications without prior notification or public announcement.
© Thorn Lighting

# Popular Range Battens

## 96229555 <POPPACK BATTEN 1X58W T26 HF L840

Thorn Lighting is constantly developing and improving its products. The right is reserved to change specifications without prior notification or public announcement.
© Thorn Lighting