Carat

96635156 CT L 36L25-730 NR CL1 T76F ANT

ISO 9223 C5 | IP66 | IK08 | T_a35

Carat

An elegant urban lantern with durable performance. Programmable LED driver, set for fixed output, driving 36 LEDs at 250mA. Body: large size, die-cast aluminium (EN AC-44300), anthracite (close to RAL7043). Shaft:. Cover: glass. Fixings: stainless steel with anti-galvanic treatment. Narrow Road optic, with Colour Rendering Index min.: 70 Correlated colour temperature*: 3000 Kelvin LEDs supplied. Class I electrical, Impact strength: IK08, IP66, Ta max.: 35°C. Supplied with Ø76mm spigot adaptor pre-fitted for post-top, 5° tilt.

Surge protection: 10kV single pulse common mode and 8kV multipulse common mode and 6kV multipulse differential mode. If permanent DALI system is connected, 6kV multipulse common and differential mode.

Dimensions: Ø510 x 87 mm
Luminaire input power: 29 W
Luminaire luminous flux: 4187 lm
Luminaire efficacy: 144 lm/W
Weight: 8.9 kg
Scx: 0.05 m²

TLG_CARA_F_L_PostTop.jpg

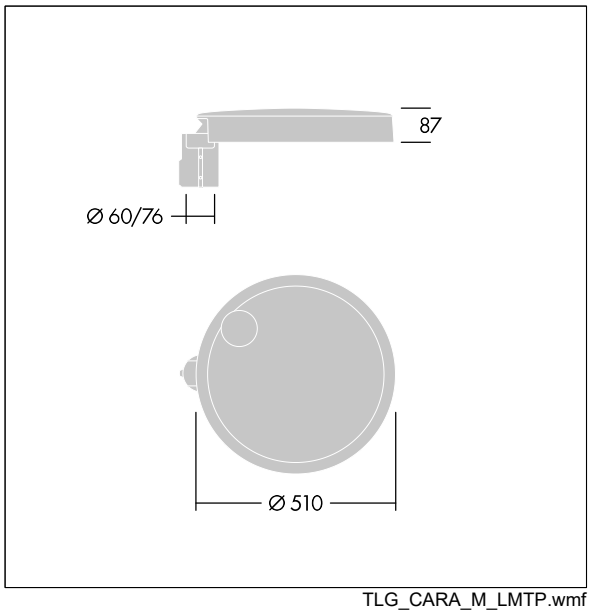

TLG_CARA_M_LMTP.wmf

This product contains a light source of energy efficiency class D.

All values marked with an * are rated values. Thorn uses tried and tested components from leading suppliers, however there may be isolated instances of technology-related failures of individual LEDs during the rated product lifetime. International standards set the tolerance in initial flux and connected load at ±10%. Unless stated otherwise, the values apply to an ambient temperature of 25°C.

Thorn Lighting is constantly developing and improving its products. The right is reserved to change specifications without prior notification or public announcement.
© Thorn Lighting