96279035 <ALTISLEDG3 1 BRICK LOUVRE WB

Louvre kit for 1 Altis LED module with wide light distribution. Can be installed before or after installation on site. Finished black (close to RAL9005).

Design advice can be obtained from your local representative.

Weight: 1.1 kg

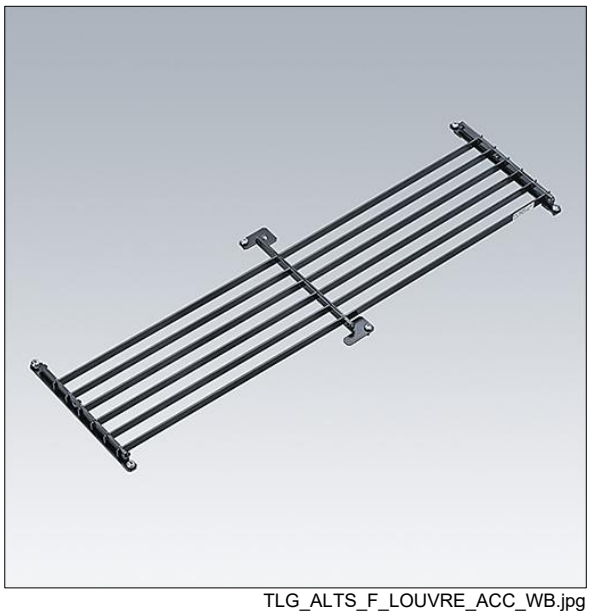

TLG_ALTS_F_LOUVRE_ACC_WB.jpg

All values marked with an * are rated values. Unless stated otherwise, the values apply to an ambient temperature of 25°C.

Thorn Lighting is constantly developing and improving its products. The right is reserved to change specifications without prior notification or public announcement.
© Thorn Lighting