Contrast

96633436 CONT3 4L50-RGBW MB NG IO ANT

ISO 9223 C5 | IP66 | IK08 | Ta -20 +35

Contrast

A small architectural Bracket mounted LED floodlight with LEDs driven at 500mA and a medium beam distribution. ,. Pre-wired with IP66 connector, gear box to be ordered separately. Class II electrical (this product is not earthed), IP66, IK08. Body: die-cast aluminium (EN AC-44300), powder coated, textured anthracite (close to RAL7043). Compatible with coastal environments. Glass: tempered, 5mm thick. Gasket: EPDM. Screws: geomet. Complete with RGBW LEDs (White = 830)

,

Dimensions: Ø83 x 103 mm
Luminaire input power: 8 W
Luminaire luminous flux: 209 lm
Luminaire efficacy: 26 lm/W
Weight: 1.03 kg

TLG_CON3_F_XS.jpg

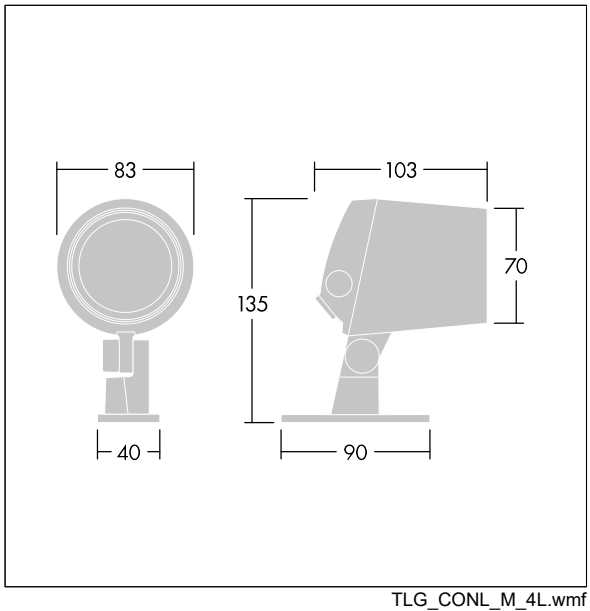

TLG_CONL_M_4L.wmf

This product contains a light source of energy efficiency class F.

All values marked with an * are rated values. Thorn uses tried and tested components from leading suppliers, however there may be isolated instances of technology-related failures of individual LEDs during the rated product lifetime. International standards set the tolerance in initial flux and connected load at ±10%. Unless stated otherwise, the values apply to an ambient temperature of 25°C.

Thorn Lighting is constantly developing and improving its products. The right is reserved to change specifications without prior notification or public announcement.
© Thorn Lighting