Steel Stepped Columns and Accessories

96632565 ADAPTOR FOR STEP COL 3/4/5/6M 76MM-60MM*

Steel Stepped Columns and Accessories

Post top adaptor to fit on Ø76mm top spigot to reduce to Ø60mm spigot.

Weight: 1.9 kg (approx)

This adaptor is suitable for use with the following columns:

96632725 : 3m stepped column, root mounted, Ø76mm top spigot
96632726 : 3m stepped column, flange mounted, Ø76mm top spigot
96632727 : 4m stepped column, root mounted, Ø76mm top spigot
96632728 : 4m stepped column, flange mounted, Ø76mm top spigot
96632555 : 5m stepped column, root mounted, Ø76mm top spigot
96632556 : 5m stepped column, flange mounted, Ø76mm top spigot
96632557 : 6m stepped column, root mounted, Ø76mm top spigot
96632558 : 6m stepped column, flange mounted, Ø76mm top spigot

Please note : Delivery charges will apply to this item.

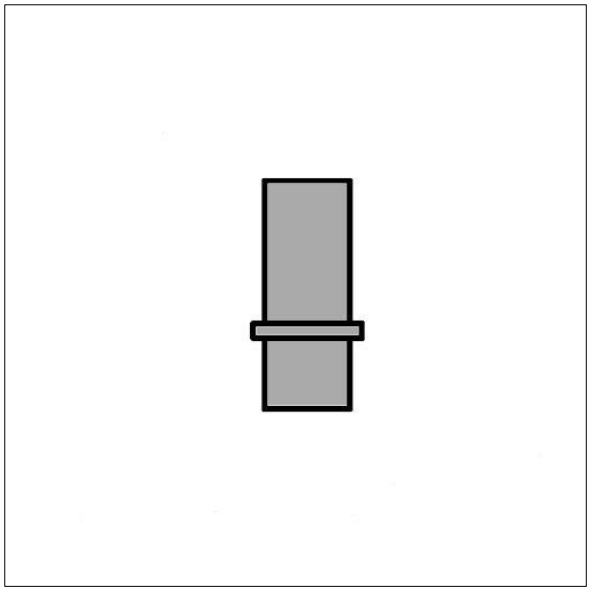

TLG_COLU_F_ADA5.jpg

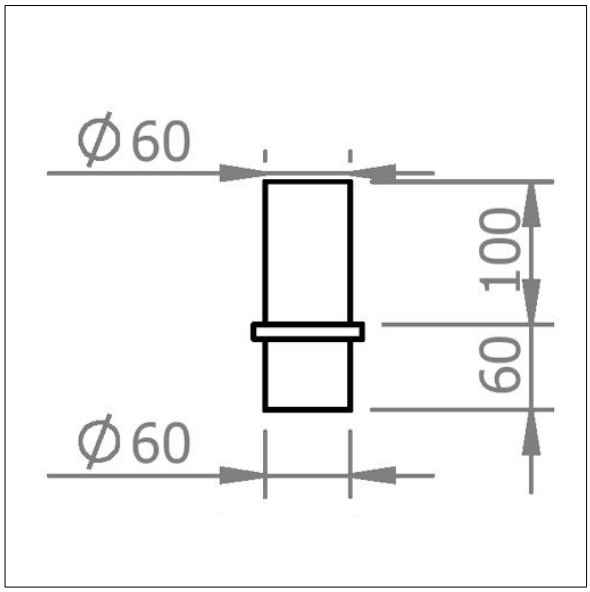

TLG_COLU_M_ADA5.wmf

All values marked with an * are rated values. Unless stated otherwise, the values apply to an ambient temperature of 25°C.

Thorn Lighting is constantly developing and improving its products. The right is reserved to change specifications without prior notification or public announcement.
© Thorn Lighting