THORN

92909117 <CHAL 200 LED3000-840 BC RSB

A recessed LED downlight. Remote dimmable control gear, Wireless controlled via App with Bluetooth® 4.x - basicDIM Wireless , (installation in metal or concrete ceilings or MSF housing not permitted). Luminaire arrangement: Mobile control to luminaire max. 15 m, luminaire to luminaire max. 4 m. IP54 (IP20 from above), Class II electrical (this product is not earthed). Body: aluminium, painted white (RAL 9016). Reflector: satinbrite. Suitable for mounting in ceiling thicknesses of 1-40mm in a Ø200mm cut-out. Complete with 4000K LED.

Radio definition: basicDIM Wireless - Bluetooth® 4.x,
Radio frequency: 2.4...2.483 GHz, Radio power: +4 dBm

Dimensions: Ø220 x 94 mm
Luminaire input power: 26.3 W
Luminaire luminous flux: 3130 lm
Luminaire efficacy: 119 lm/W
Weight: 0.97 kg

TLG_CHLC_F_PDB.jpg

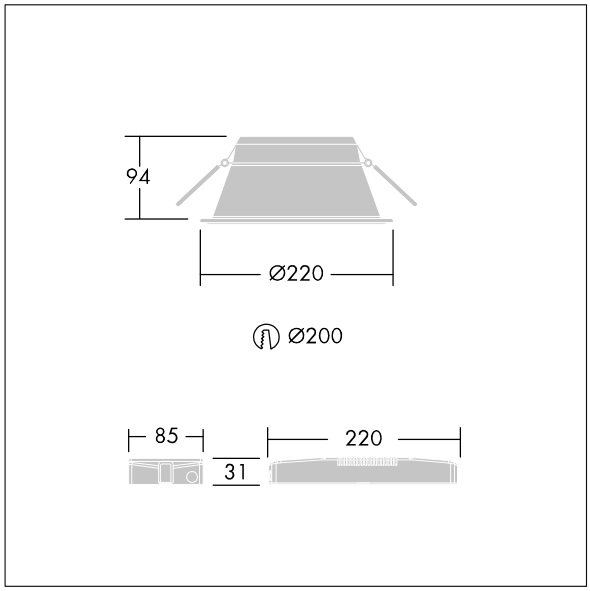

TLG_CHLC_M_DL1.wmf

This product contains a light source of energy efficiency class D.

All values marked with an * are rated values. Thorn uses tried and tested components from leading suppliers, however there may be isolated instances of technology-related failures of individual LEDs during the rated product lifetime. International standards set the tolerance in initial flux and connected load at ±10%. Unless stated otherwise, the values apply to an ambient temperature of 25°C.

Thorn Lighting is constantly developing and improving its products. The right is reserved to change specifications without prior notification or public announcement.
© Thorn Lighting

92909117 <CHAL 200 LED3000-840 BC RSB

Thorn Lighting is constantly developing and improving its products. The right is reserved to change specifications without prior notification or public announcement.
© Thorn Lighting