Voyager Style

96631616 VOYAGER STYLE 150 P MS-WF15 E3D SM-S WH

T_a -5 +30	IP40	IK03	CE	T_a 0 +35	

Voyager Style

Ultra slim LED escape sign luminaire for suspended, wall or ceiling mounting; recessed ceiling mounting possible with optional recessed ceiling frame; Luminaire with local battery supply for 3 hr. emergency lighting in maintained or non-maintained mode, with automatic test (auto-test) via the luminaire, optional central monitoring via DALI, display of luminaire status via status LED; ; housing made of polycarbonate ; luminaire easy to install; Quick fit terminal block, through wiring possible up to 2,5 mm²; supplied with a set of ISO 7010 mountable direction signs (left, right, up, down and blank) for viewing from a maximum distance of 30 m; mounting of signs with discrete mounting pins; zero maintenance thanks to LED technology; service life of 50, 000 h at constant luminous flux; uniform backlighting of pictogram; luminance > 500 cd/m² in the white region; Power supply: 220/240 V AC; degree of protection: IP40, class of protection: Class II electrical (this product is not earthed); Impact strength: Impact strength: IK03; Dimensions: 265 x 37 x 57 mm; weight: 1.27 kg

Self-contained emergency luminaires rely on long-lasting batteries. Thorn batteries are robust and comes with a three-year guarantee (applicable subject to the terms and conditions of and to the extent as set forth in the manufacturer's guarantee on Thorn products, which shall be applicable analogously and which is available under http://www.thornlighting.com/en/products/5-year-guarantee/5-year-warranty/terms-of-guarantee_en.pdf. The battery guarantee shall not come into effect if the product has been installed later than three(3) months after delivery EXW (Incoterms 2010).

TLG_VYST_F_150MSWF.jpg

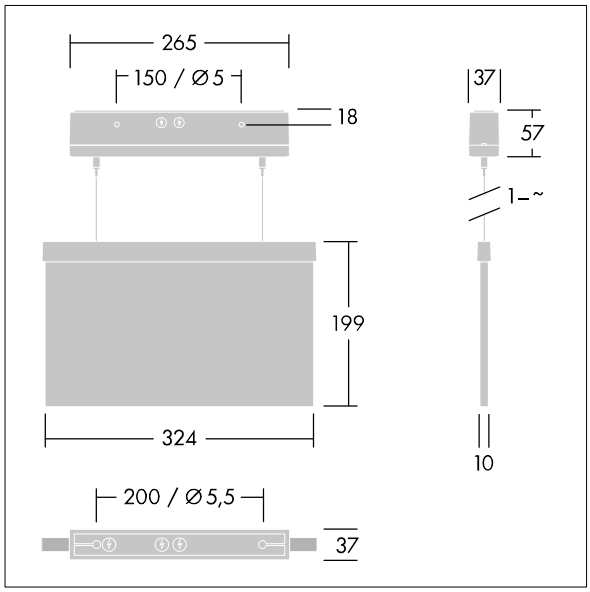

TLG_VYST_M_150MC.wmf

All values marked with an * are rated values. Unless stated otherwise, the values apply to an ambient temperature of 25°C.

Thorn Lighting is constantly developing and improving its products. The right is reserved to change specifications without prior notification or public announcement.
© Thorn Lighting