Voyager Star

96629617 VOYAGER STAR P MRCR ESC E3D WH

IP 20 40 | halogen | CE

Voyager Star

High performance, ceiling recessed LED emergency lighting luminaire, Luminaire with local battery supply for 3 hr. emergency lighting in maintained or non-maintained mode, with automatic test (auto-test) via the luminaire, optional central monitoring via DALI, display of luminaire status via status LED with escape route optic.. Housing: aluminium die casting alloy, powder coated white (close to RAL9016). Gear box for mounting in ceiling recess:. IP20_IP40,. Lens: polycarbonate. Luminaire can be installed quickly and maintained without tools. Electrical connection (230VAC) via maximum 2.5mm² cable, loop in - loop out possible. Optimum thermal management via heat sink. Suitable for recessed installation in concrete casting surround (please order separately). Complete with LEDs.. Ceiling cutout Ø68mm in ceiling thicknesses 1-25mm.

Self-contained emergency luminaires rely on long-lasting batteries. Thorn batteries are robust and comes with a three-year guarantee (applicable subject to the terms and conditions of and to the extent as set forth in the manufacturer's guarantee on Thorn products, which shall be applicable analogously and which is available under http://www.thornlighting.com/en/products/5-year-guarantee/5-year-warranty/terms-of-guarantee_en.pdf. The battery guarantee shall not come into effect if the product has been installed later than three(3) months after delivery EXW (Incoterms 2010).

Luminaire input power: 4.5 W
Dimensions: Ø85 x 2 mm
Weight: 1 kg

TLG_VSTR_F_MRCR_E3D_ESC_WH.jpg

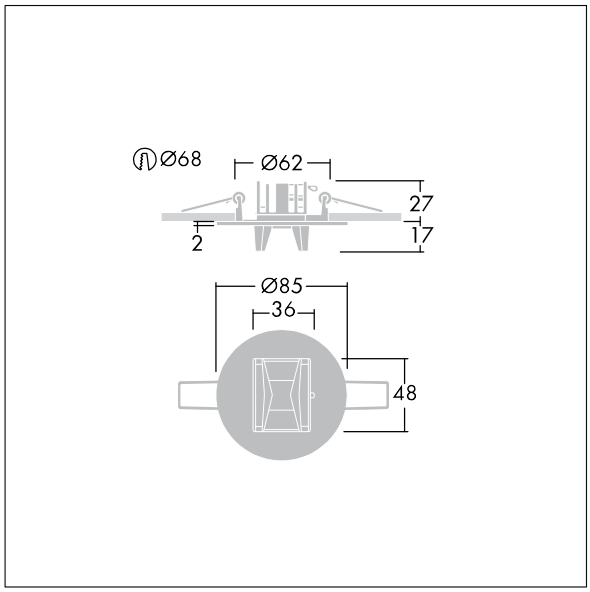

TLG_VYLD_M_MRE ROUTE.wmf

All values marked with an * are rated values. Thorn uses tried and tested components from leading suppliers, however there may be isolated instances of technology-related failures of individual LEDs during the rated product lifetime. International standards set the tolerance in initial flux and connected load at ±10%. Unless stated otherwise, the values apply to an ambient temperature of 25°C.

Thorn Lighting is constantly developing and improving its products. The right is reserved to change specifications without prior notification or public announcement.
© Thorn Lighting

Voyager Star

96629617 VOYAGER STAR P MRCR ESC E3D WH

Thorn Lighting is constantly developing and improving its products. The right is reserved to change specifications without prior notification or public announcement.
© Thorn Lighting