THORN

96275199 <ALTIS S 396L105 NB CL1 L957-T90 v2

IP66	IK08	⏚	CE	T_a25

A high powered LED floodlight with narrow light distribution for sports lighting applications. Electronic, DMX / DALI controllable gear driving 396 LEDs at 1.05A. Class I electrical, IP66, IK08. Body, Frame and Stirrup: die-cast aluminium painted dark sandy grey (close to RAL 7043). Stirrup fixed using three fixation points available, one Ø22mm hole and two Ø15mm holes (nuts and bolts not provided). Glass: 5mm toughened. Screws: Stainless steel. Tiltable LED modules allow optimisation of lighting designs. Flicker free operation suitable for HDTV broadcasting. Complete with 5700K LED, TLCI = 90+.

Due to the unique calculation requirements of this product the photometric data is not provided here but design advice may be obtained from your local representative.

Dimensions: 673 x 745 x 535 mm
Luminaire input power: 1244 W
Weight: 27.6 kg
Scx: 0.162 m² at 0°

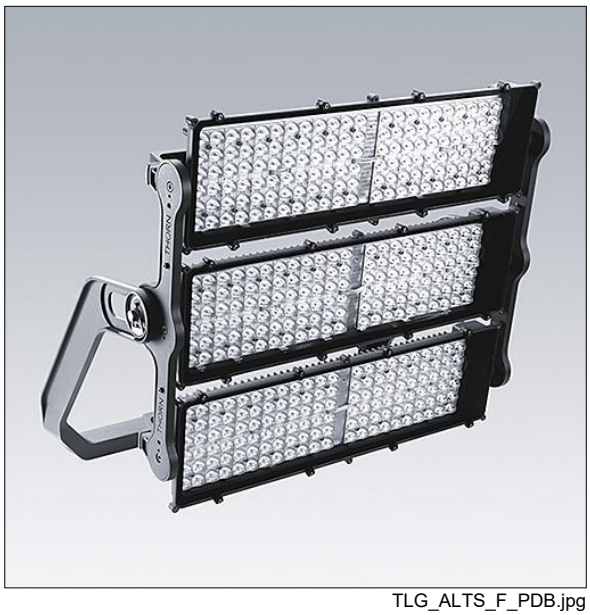

TLG_ALTS_F_PDB.jpg

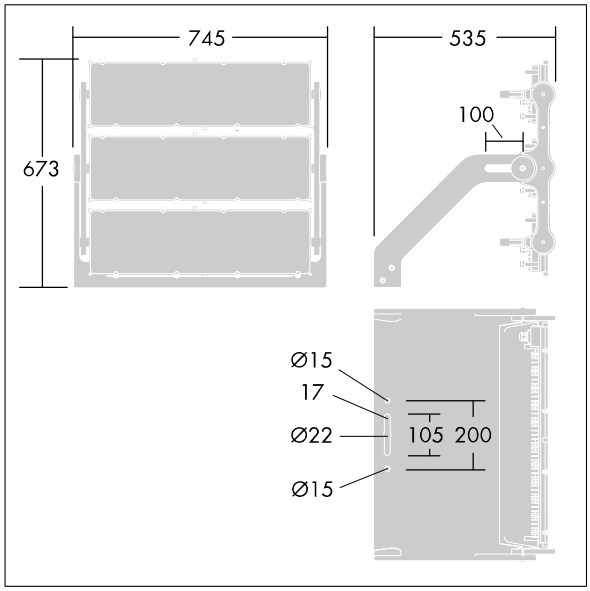

TLG_ALTS_M_LD1.wmf

All values marked with an * are rated values. Unless stated otherwise, the values apply to an ambient temperature of 25°C.

Thorn Lighting is constantly developing and improving its products. The right is reserved to change specifications without prior notification or public announcement.
© Thorn Lighting