96628622 <PRIM L2 LED7400-840 WB HF E3 SET

IP20 | halogen | IK02 | CE

2000 mm length of trunking, for direct ceiling fixing or suspended mounting on wire or chains, with 7,400 lm LED luminaire with wide distribution.. Roll-formed steel sheet in Polyester lacquered finish. Class I electrical, IP20. Standard module, with mechanical connector. Supplied with plug-in, 7-pole through wiring. Complete with side panels..

Dimensions: 2000 x 68 x 93 mm
Luminaire input power: 49 W
Luminaire luminous flux: 7380 lm
Luminaire efficacy: 151 lm/W
Weight: 6.2 kg

TLG_PMM5_F_LEDPDB.jpg

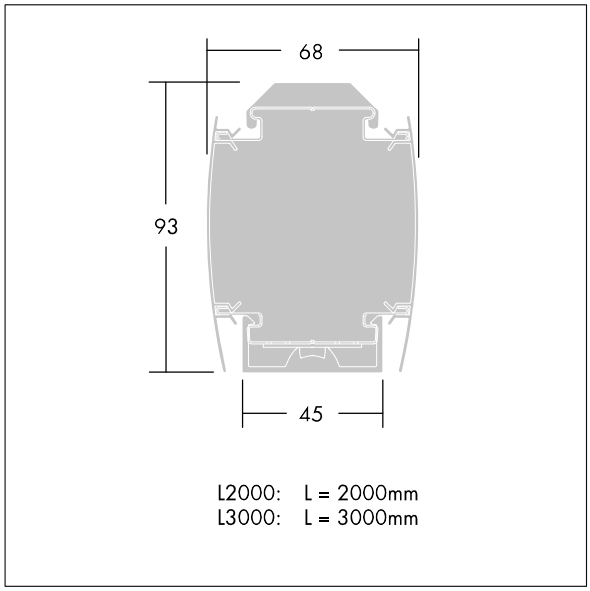

TLG_PMML_M_LED_bestueckt.wmf

This product contains a light source of energy efficiency class D.

All values marked with an * are rated values. Thorn uses tried and tested components from leading suppliers, however there may be isolated instances of technology-related failures of individual LEDs during the rated product lifetime. International standards set the tolerance in initial flux and connected load at ±10%. Unless stated otherwise, the values apply to an ambient temperature of 25°C.

Thorn Lighting is constantly developing and improving its products. The right is reserved to change specifications without prior notification or public announcement.
© Thorn Lighting

96628622 <PRIM L2 LED7400-840 WB HF E3 SET

Thorn Lighting is constantly developing and improving its products. The right is reserved to change specifications without prior notification or public announcement.
© Thorn Lighting