Virgule LED

96644523 <VIRGULE LED3800-830 MT3 FL BK

IP20	⏚	CE	T_a 0 +25

Virgule LED

An efficient, large sized, LED spotlight with 20° flood distribution. Track mounted or surface mounted using adaptor accessory. Class I electrical, IP20. Body and trackbox: aluminium, painted black. Complete with 3000K LED.

Dimensions: 183 x 116 x 207 mm
Luminaire input power: 40.6 W
Luminaire luminous flux: 3758 lm
Luminaire efficacy: 93 lm/W
Weight: 1.45 kg

TLG_VRG2_F_LPDBBK.jpg

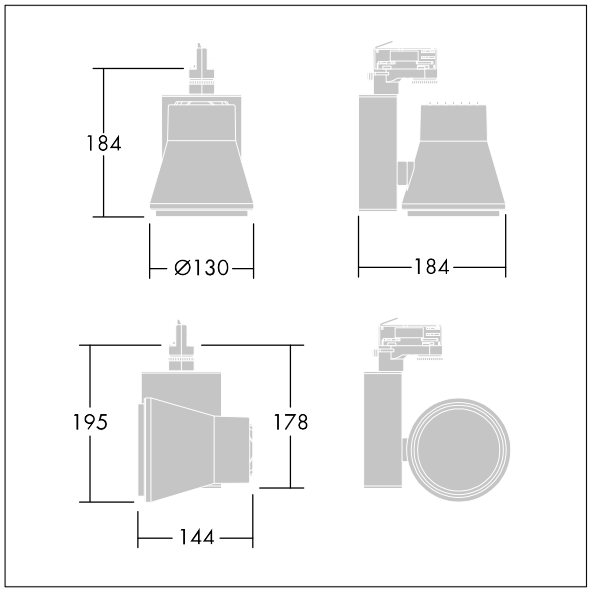

TLG_VRG2_M_SA5210.wmf

All values marked with an * are rated values. Thorn uses tried and tested components from leading suppliers, however there may be isolated instances of technology-related failures of individual LEDs during the rated product lifetime. International standards set the tolerance in initial flux and connected load at ±10%. Unless stated otherwise, the values apply to an ambient temperature of 25°C.

Thorn Lighting is constantly developing and improving its products. The right is reserved to change specifications without prior notification or public announcement.
© Thorn Lighting

Virgule LED

96644523 <VIRGULE LED3800-830 MT3 FL BK

Thorn Lighting is constantly developing and improving its products. The right is reserved to change specifications without prior notification or public announcement.
© Thorn Lighting