E/Fact

96271670 EFACT C2 9L50 SOFT 832 AL FR

IP67 | IK09

E/Fact

A large square ground recessed luminaire. 9 LED(s) driven at 500mA by integral driver for walkover guidance applications. Body: die-cast aluminium with powdered paint finish. Frame: painted aluminium, 2mm thick. Front glass: frosted toughened sodic glass, 12mm thick, surface temperature complies with EN60598-2-13. Recessing box: polypropylene. Rated IP67, class I electrical. Maximum static load 1000kg. Complete with 3200K LED

Dimensions: 262 x 262 x 200 mm
Luminaire input power: 11.5 W
Luminaire luminous flux: 133 lm
Luminaire efficacy: 12 lm/W
Weight: 6.95 kg

TLG_EFCT_F_C2ALFR.jpg

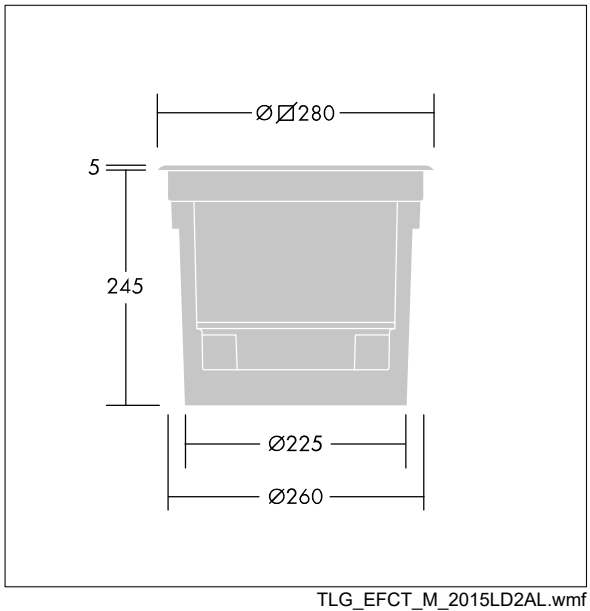

TLG_EFCT_M_2015LD2AL.wmf

This product contains a light source of energy efficiency class E.

All values marked with an * are rated values. Thorn uses tried and tested components from leading suppliers, however there may be isolated instances of technology-related failures of individual LEDs during the rated product lifetime. International standards set the tolerance in initial flux and connected load at ±10%. Unless stated otherwise, the values apply to an ambient temperature of 25°C.

Thorn Lighting is constantly developing and improving its products. The right is reserved to change specifications without prior notification or public announcement.
© Thorn Lighting