Mica

96271486 MICA SLIM SS 1L70 ACC 840 EDO W8

IP67	IK10				

Mica

A small, shallow, round ground recessed luminaire with 8 window dome attachment. 1 LED(s) driven at 700mA by integral driver for driveover guidance applications. Body: die-cast aluminium with powdered paint finish. Frame: painted aluminium, 3mm thick. Surface temperature complies with EN60598-2-13. Pre-wired with 0.5m cable. Recessing box: polypropylene. Rated IP67, class I electrical. Maximum static load 2000kg. Complete with 4000K LED

Mica and Mica Slim can be installed in areas with a maximum low speed of 30km/h for the flat versions and 20km/h for the dome versions.

Dimensions: Ø103 x 196 mm

Weight: 1.47 kg

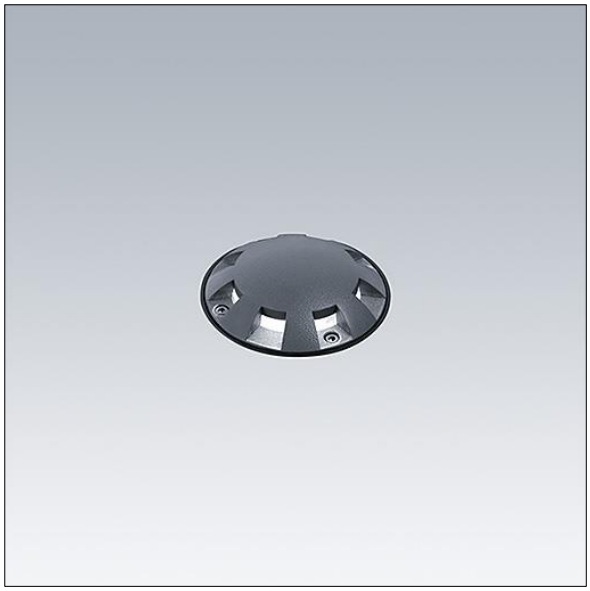

TLG_MICA_F_SLSS6EDOWIN82.jpg

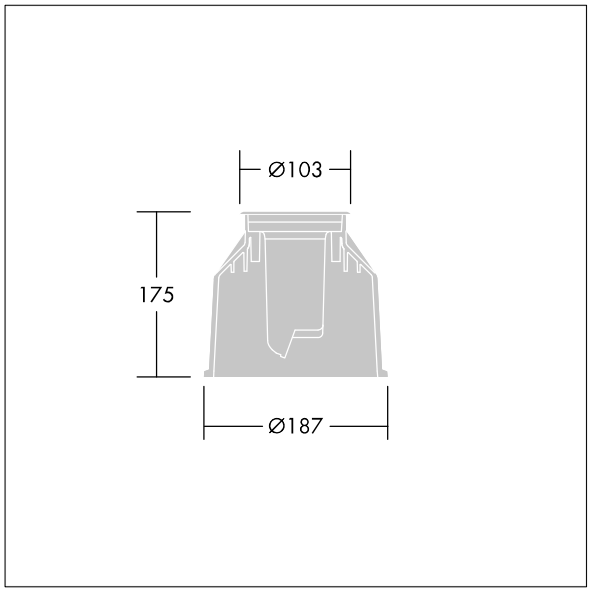

TLG_MICA_M_2015LDSLMSSAL.wmf

This product contains a light source of energy efficiency class E.

All values marked with an * are rated values. Unless stated otherwise, the values apply to an ambient temperature of 25°C.

Thorn Lighting is constantly developing and improving its products. The right is reserved to change specifications without prior notification or public announcement.
© Thorn Lighting